COSEN SAWS

MC-315

Manual Circular Saw

(CE Model)

Instruction Manual

The Pinnacle of Cutting Performance

Cosen Mechatronics Co., Ltd.

Warranty

- The firm guarantees the machine described hereby, designed in compliance with all regulations in force, in particular safety and health regulations; the machine has undergone successful testing.
- The warranty covers a period of 12 months. İt doesn't cover electrical motors and tools.
- The purchaser is entitled 'replacement of faulty parts'. Shipping and packing costs are at his expense.
- The warranty doesn't cover the parts damaged by falls or careless handling of the machine, incorrect operation, non-compliance with the maintenance rules. Any tampering with the machine, especially with the safety devices automatically expires the warranty and the manufacturer will be freed from any responsibility.
- Any kind of alteration on the machine ends the warranty and the manufacturer becomes free from every kind of responsibility.
- No claim for damages shall be accepted in case the machine lays idle for a long period of time.
- Machine is designed to be run indoors. İt is not recommended to run the machine outdoors.
- The serial number on the machine is a 'main reference for the warranty', instructions manual, after sale service and identify the machine in case of need.

Important

Upon the delivery of the machine, the consumer must make himself sure that all the devices indicated in the paragraph of the safety manual are present and working correctly. Furthermore, he must mount in conformity with the instructions indicated those devices which are not mounted at the time of delivery to facilitate transport.

When ordering spare parts

İt is necessary to state:

- Machine model
- Serial number and year of production
- İtem reference number

General Information

- The machines are manufactured in compliance with the accident prevention rules in force.
- Strictly comply with the instructions contained in this manual to obtain the best performance from the machine. Strict compliance with the rules contained herewith will ensure optimum results and avoid any inconvenience caused by the non-compliance of operation and maintenance instructions.
- Closely follow the instructions given below to avoid contacting the manufacturer for the problems which can be easily solved.
- If after having strictly compliance with the given instructions, the purchaser still needs the help of our technical assistance service, he must supply all the technical indications necessary to determine the type of problem and/or the parts which are not functioning correctly. This will enable our technical assistance service to intervene quickly and efficiently on the machine.

Copies of the instruction manual may be requested upon indication of the machine serial number**.**

General Safety Notes

All installation work including the electrical connection must only be carried out by qualified personnel.

The machine must only be operated by a technically trained and experienced operative who is also instructed in 'safety at work' procedures.

Any adjustments, cleaning, repairs or changing of the saw blade must under no circumstances be performed unless the machine is fully isolated from the electrical power supply. Ensure the emergency stop button on the control binnacle is pressed and the power supplies at the mains are disconnected."

The saw blade must be regularly inspected and maintained in good serviceable condition. Eye protection, ear protection, gloves and protective clothing must be worn when any of the above procedures are being carried out, as well as when cutting fluid is prepared, introduced or displaced from the saw machine (the relevant environmental regulations must be observed in case of the use and disposal of cutting fluid etc.)

The saw must be installed on ground. Observe the permissible floor load. Then the saw machine has been properly bolted to ground securely.

Allow sufficient working space around the saw of at least 1 meter. İnstallations of stock roller conveyors require additional space and possibly a lifting mechanism for heavy work pieces. Always ensure that the working area around the saw is well lit.

Definitions

(EN ISO 12100:2010)

User: the person, body or company who has bought or rented the machine and intends to employ it for the uses contemplated.

Operator: the physical person authorized by the user to operate the machine after having been suitable trained on the use and specific risks of the machine.

Authorized person: the skilled person, who is authorized by the user to carry out maintenance or setting-up operation of the machine.

Dangerous zone: anywhere inside and / or near a machine, which the presence of an exposed person represents a risk for his safety and health.

Exposed person: any person who finds himself in dangerous zone, either entirely or partially

Purpose of machine

This machine has been designed for the cutting of ferrous material and the other light materials with hollow or cross section. Any other material use differing from the above-mentioned materials is to be considered inappropriate and prohibited.

The MC-315 is manual cold saw machine that can perform cuts angled from 45° left to 45° right.

The machine operator must be trained and informed of risks and must have the instruction manual at his disposal.
The operator must not work in the vicinity of the danger zone (cutting area) with any other people.
During the cutting process, the operator must never put hands or use tools in the cutting area

RELATED DIRECTIVES AND STANDARDS

DIRECTIVES

MACHINERY DIRECTIVE- **2006/42/EC**

LOW VOLTAGE DIRECTIVE- **2006/95/EC**

ELECTROMAGNETIC COMPATIBILITY DIRECTIVE- **2004/108/EC**

STANDARDS

EN ISO 13857:2008; SAFETY OF MACHINERY-SAFETY DISTANCES TO PREVENT DANGER ZONES BEING REACHED BY UPPER LOWER LIMBS

EN ISO 13849-1:2008/AC:2009; SAFETY OF MACHINERY - SAFETY-RELATED PARTS OF CONTROL SYSTEMS - PART 1: GENERAL PRINCIPLES FOR DESIGN

EN 13898:2003+A1:2009/AC:2010: MACHINE TOOLS - SAFETY - SAWING MACHINES FOR COLD METAL

EN ISO 12100:2010; SAFETY OF MACHINERY - GENERAL PRINCIPLES FOR DESIGN – RISK ASSESMENT AND RISK REDUCTION.

EN 60204-1:2006/A1:2009; SAFETY OF MACHINERY - ELECTRICAL EQUIPMENT OF MACHINES - PART 1: GENERAL REQUIREMENTS

EN ISO 13850: SAFETY OF MACHINERY - EMERGENCY STOP - PRINCIPLES FOR DESIGN

Warning

This chapter outlining the safety devices and norms was drawn up bearing in mind the normal use of the machine as stated in the chapter on the operation of the machine and the adequate preparation of the operators as regards the specific risks linked to the operation of the machine.

İf the machine isn't used according to instruction given in the 'purpose of the machine' chapter in this manual, the manufacturer isn't responsible for any damage caused to people and things.

Furthermore, the manufacturer isn't responsible for any damage to people and things and things resulting from the non-compliance with the following warnings.

Adopt all the necessary precautions during loading, calibration, part replacement, cleaning, and repair or maintenance operations to prevent someone else from turning the machine on.

Do not temper with the safety devices and guards on the machine.

Do not remove any of the safety devices and guards on the machine.

Always make sure that safety devices and guards are remounted after their temporary removal for technical reasons.

INTRODUCTION

This machine has been designed to provide a simple and reliable solution to the various needs of workshops and departments that work with metals and require a high degree of flexibility from the machine. The MC-315 /MC-315P is a pendulum sawing machine that can perform cuts angled from 45° left to 45° right.

TECHNICAL DATA

MC-315 (MC-315P)	UNIT	VALUE
DISC BLADE		
External disc diameter	mm	315
Internal hole diameter	mm	32-40
Blade thickness	mm	2-2,5
CUTTING SPEED		
Standard speeds 1 / 2	rpm	45 / 90 (22/44)
POWER		
Three-phase electric motor 2 speed	kW	1.3 / 1.8 (1/1.6)
Lubricant / coolant electric pump motor	W	120

DIMENSIONS AND CUTTING CAPACITY

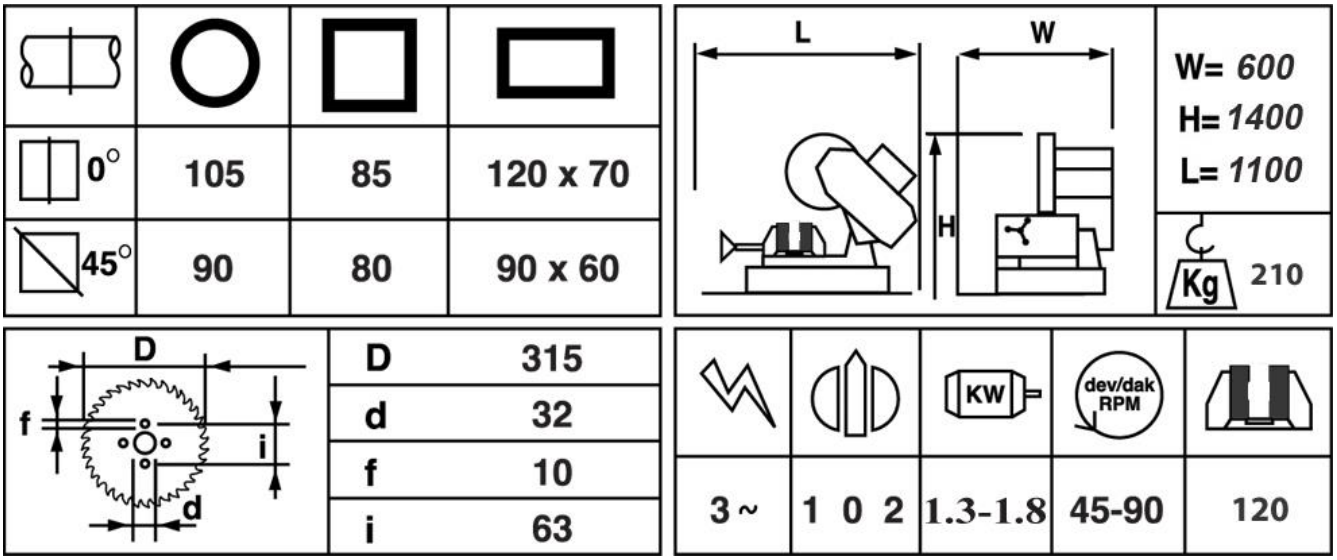

CHAPTER 1- SAFETY AND ACCIDENT PREVENTION

1.1. ADVICE FOR THE OPERATOR

For the correct use of the machine we would recommend that the instructions contained in this section:

You must be attention these section

- Check the voltage indicated on the plate, normally fixed to the machine motor, is the same as the line voltage.
- Check the efficiency of your electric supply and earthing system; connect the power cable of the machine to the socket and the earth lead (yellow green in color) to the earthing system.
- When the tool head is in rest position (raised), the blade must be stationary.
- It is forbidden to work on the machine without its shields.
- Always disconnect the machine from the power socket before chancing the blade or carrying out any maintenance job, even in the case of abnormal machine operation.
- Do not use the machine without the guards in position.
- Never shift the machine while it is cutting.
- Keep the area free of equipment, tools or any object.
- Before starting cutting operations, support the material at both ends of the machine using the support arm.
- Before starting any cutting operations, ensure that the workpiece is securely held in the vice and the machine has been set correctly.
- Do not use the machine to cut pieces that exceed the capacity of the machine as listed in the technical specifications.
- Do not use blades of different sizes to those recommended in the machine's specifications.
- When cutting very short pieces, make sure that they are not dragged behind the support shoulder, where they could jam in the blade.
- Remove equipment, tools or any other objects from the cutting zone; always keep the working area as clean as possible.
- Perform only one operation at a time and never have several objects in your hands at the same time.

- The operator must not perform any risky operations or those not required for the machining in course (e.g. remove swarf or metal shavings from the machine while cutting).
- All internal and/or external operations, maintenance or repairs must be performed in a well-lit area or where there is sufficient light from extra sources so as to avoid the risk of even slight accidents.
- Always wear proper goggles or protective glasses.
- Do not wear oversize clothing with long sleeves, oversize gloves, necklaces or any other object that may become entangled in the machine during working; long hair must be tied back and bunched.
- Never put your hands or arms into the cutting area while the machine is operating.

1.2. USE OF THE MACHINE

The machine has been designed to cut metal building materials, with different shapes and profiles, used in workshops, turner's shops and general mechanical structural work.

The employer is responsible for instructing the personnel who, in turn, are obliged to inform the operator of any accident risks, safety devices, noise emission and accident prevention regulations provided for by international standards and national laws regarding the use of the machine. The operator must be perfectly aware of the position and function of all the machine's controls.

Warning!

The manufacturer declines any responsibility whatsoever, either civil of criminal, in the case of unauthorised interference or replacement of one or more parts or assemblies on the machine, or if accessories, tools and consumable materials are used that are different from those recommended by the manufacturer himself or if the machine is inserted in a plant system and its proper function is altered.

LIGHTING

Insufficient lighting for the types of operation envisaged could constitute a safety hazard for the persons concerned. For this reason, the user of the machine must provide lighting in the working zone sufficient to eliminate areas in shadow and prevent dazzling light sources.

CONNECTIONS

Check that the power supply cables and pneumatic feed system comply with the maximum machine absorption values listed in Machine Technical Data table; replace if necessary.

EARTHING SYSTEM

The installation of the earthing system must comply with the requirements of CE Standards.

CHAPTER 2- MAIN FUNCTIONAL PARTS OF THE MACHINE

2.1-Cutting Head:

The cutting head is fixed to the turntable by means of a hinge and performs a downward travel to cut the material. The upward and downward movements of the head are controlled manually by the operator.

2.2 VICE

The cutting vice is the unit that clamps the material during the cut. Consists of a vice support, commonly known as a lead nut on which the slide with the mobile jaw and fixed jaw are mounted. The lead nut is fixed to the upper part of the base.

2.3-LUBRICANT / COOLANT SYSTEM:

The lubricant / coolant system consists of a electric pump motor located inside the pedestal on the coolant tank and an adjustable outflow nozzle fixed to the blade protective cover.

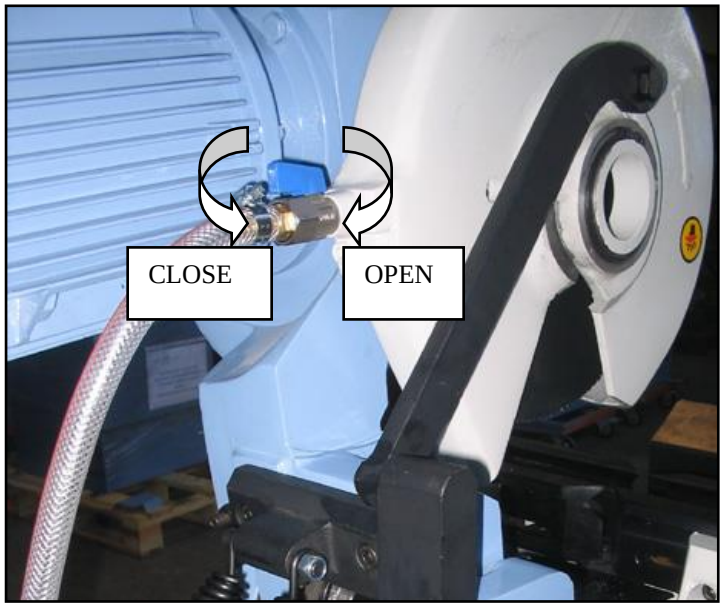

CHAPTER 3- INSTALLATION OF THE MACHINE

3.1. Check List:

Before starting to install the machine check that all the accessories. The basic version of the MC-315 circular cold saw is supplied complete with:

- Two speed electric motor
- Electric pump motor for cooling of disk
- Metal pedestal
- Coolant tank
- Possibility of making angled cut from 0° to 45° left and 45° right
- Control panel that include emergency stop button, reset button, polarity change switch, and low voltage system (24 V)
- Eyebolts for lifting the machine

Bag of accessories in the pedestal:

- Head control lever
- Bar stopper rod
- This use and maintenance manual

3.2. Minimum requirements:

In order for the machine to function correctly, the room in which it is to be installed must satisfy the following requirements :

- power supply voltage / frequency
- ambient temperature: from – 5 to + 40 degrees °C
- relative humidity: not more than 90 %
- lighting: not less than 500 LUX.

IMPORTANT:

The machine is already protected against voltage variations occurring at the installation; However, the machine will only run trouble-free if the variations do not exceed ± 10 %.

3.3. TRANSPORT AND HANDLING OF THE MACHINE

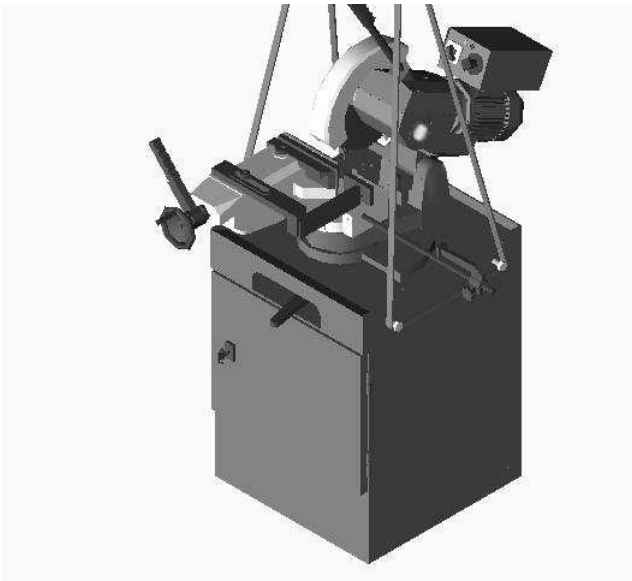

If the machine has to be shifted in its own packing, use a fork-lift truck, when lifting and moving the machine with webbing; attach the webbing to the lifting hook (eye-bolts) as illustrated, taking care not to tilt it.

3.4. INSTRUCTIONS FOR ASSEMBLY OF THE PARTS AND ACCESSORIES

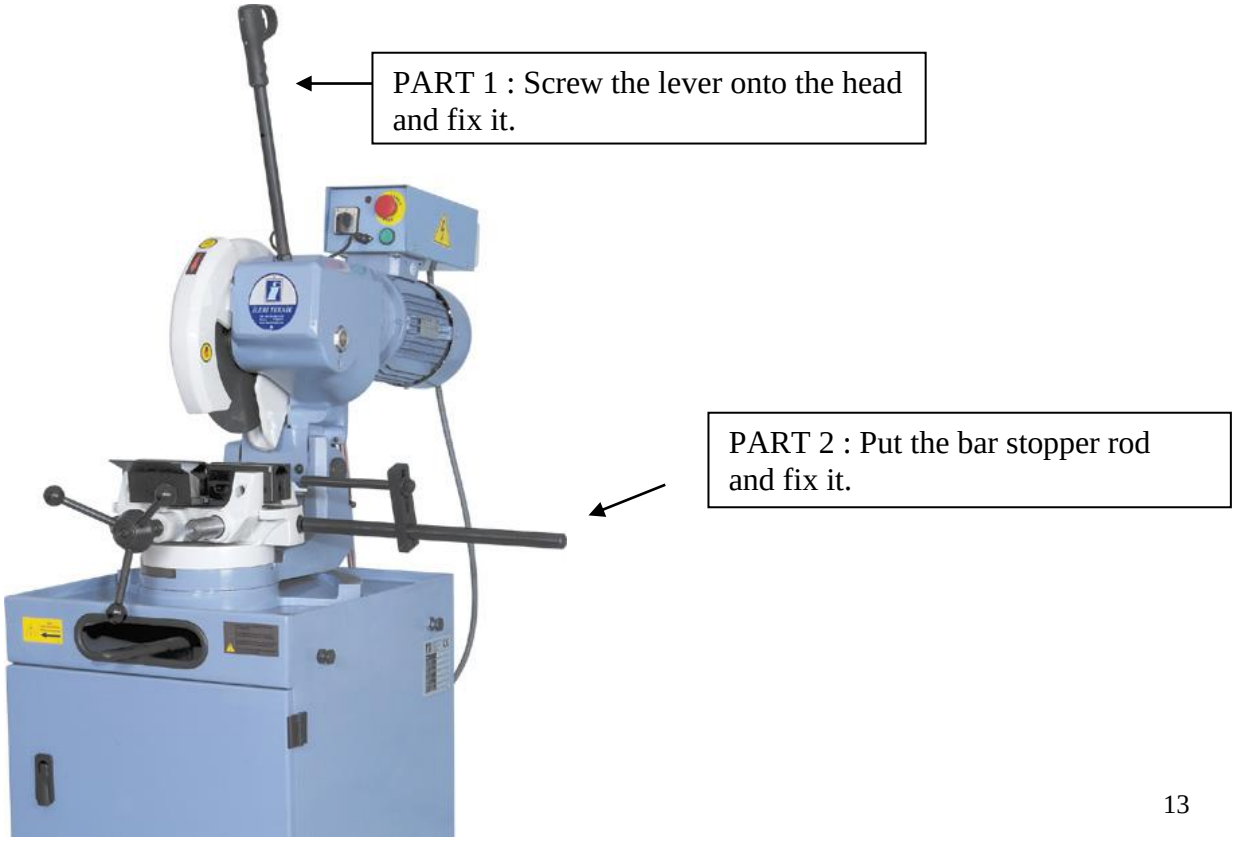

3.5. INSTRUCTIONS FOR ELECTRICAL CONNECTION

CONNECTION TO THE POWER SUPPLY

The machine is not provided with an electric plug, so the customer must fit a suitable one for his own working conditions :

CONNECTION FOR 5-CORE WIRE SYSTEM WITH NEUTRAL

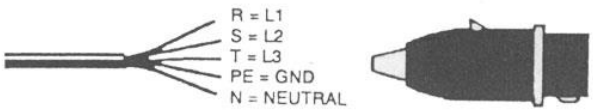

CONNECTION FOR 4-CORE WIRE SYSTEM WITH NEUTRAL

ATTENTION:

When using systems with a neutral wire, special care must be taken when connecting the blue neutral wire, in that if it is connected to a phase wire it will discharge the phase voltage to the equipment connected for voltage: phase – neutral.

3.6. DESCRIPTION OF THE CONTROL PANEL

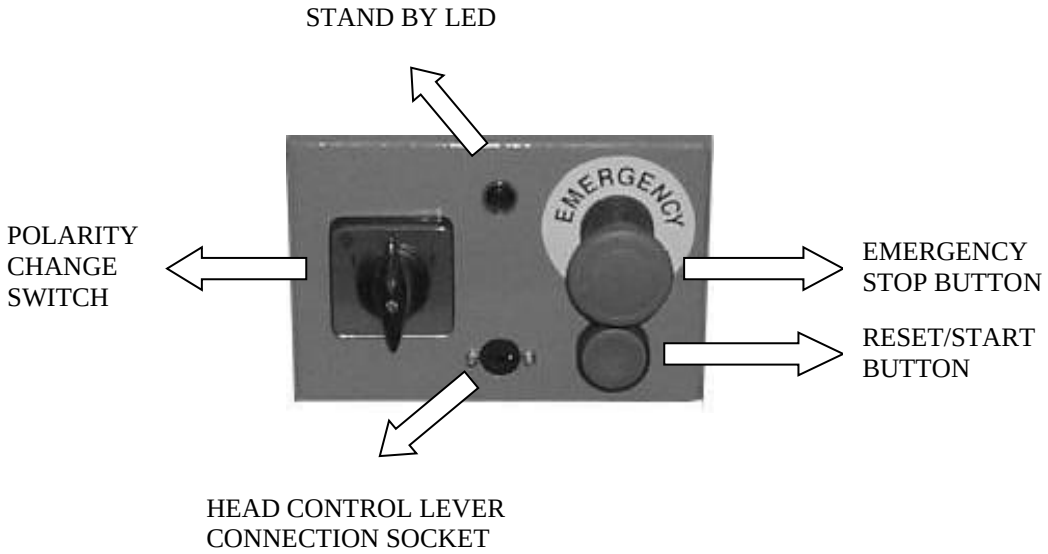

3.7. CHECKING THE MOTOR ROTATION:

- Check that the motor is rotating in the correct direction, as follows:

- Make sure that the machine is not in emergency condition (red mushroom-head pushbutton released.

- Select a cutting speed using the polarity change switch

-Switch on the machine at the reset/start button

-Grip the handle of the head control lever and start rotating the blade by pressing the microswitch on the hand control lever.

Make sure that the blade turns in the correct direction as shown in the above diagram. If it does not, simply reverse two of the phase wires on the machine's power supply input.

3.8. CUTTING CYCLE

Before operating, all the main parts of the machine must be set in optimum conditions (see the chapter on regulating the machine)

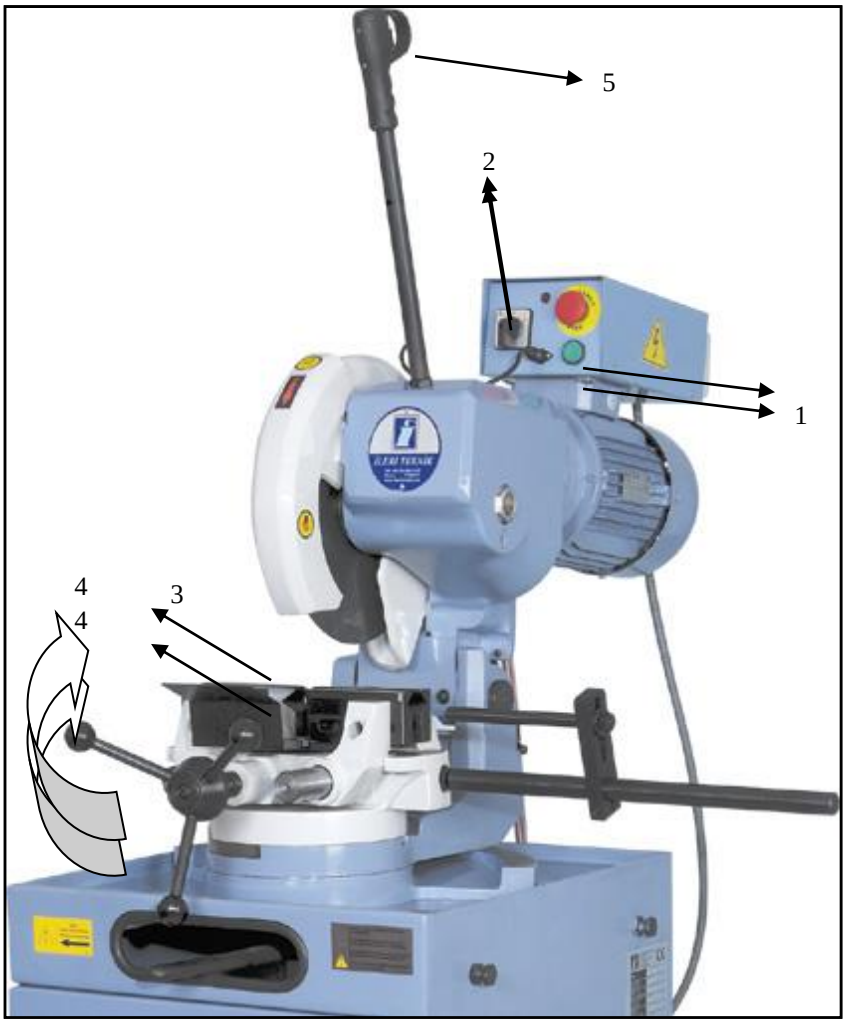

1. Switch on the machine at the reset/start button (1)
2. Select the cutting speed using the polarity change switch (2) according to the type of material to be cut.
3. Place the material in the vice (3). Close jaws against piece (4).
4. Grip the handle of the head control lever (5) and start the blade by pressing the microswitch on the hand control lever.

The motor starts up and starts the blade rotate at the same time starting the lubricant / coolant pump.

5. At the end of the cut the head can be raised. The springs behind the head make this operation easier.
6. Remove the workpiece from the vice using the handwheel. The machine is now ready for a new cutting operation.

IMPORTANT:

When starting to cut with a new blade, in order to safeguard its life and efficiency, the first two or three cuts must be made while exerting a slight pressure on the part, so that the time taken to cut is about double the normal time.

CHAPTER 4- ADJUSTMENTS

4.1.CHANGING THE BLADE

To change the blade:

- Switch the machine off.
- Release the mobile disc guard (unscrew the screw-A-) and turn it back.

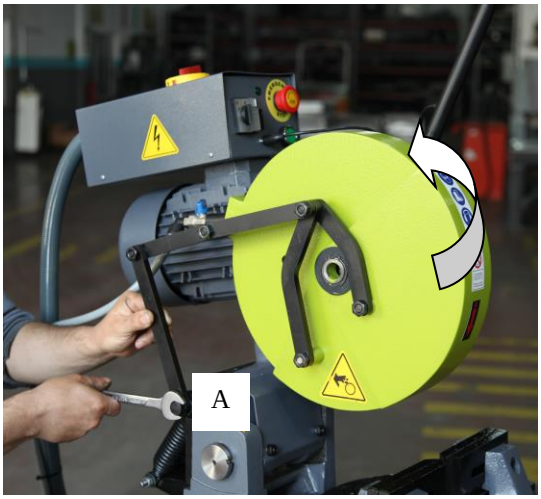

- Take off the screw-B- by Allen key, which is on the blade flange.
- Remove the outside clamping flange from the saw arbor.

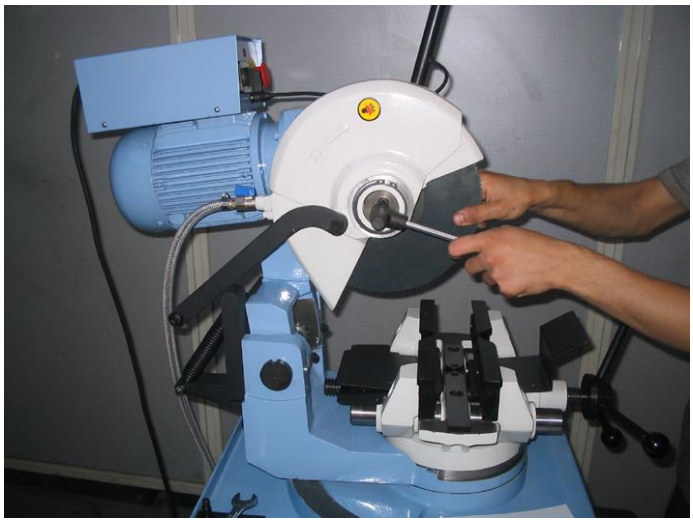

- Remove the worn or damaged disc.
- With a rag, clean the inside-clamping flange free from any dirt or chips.
- Clean the clamping area on the new disc itself
- Fit the new disc, checking the cutting direction of the teeth. Carry out the above procedure in reverse.

4.2. MAKING ANGLED CUTS

- Carry out the following procedure to make angled cut from 45° left to 45° right
- Release the turntable by means of the locking lever (L) located on the front section of the base
- With the turntable free, turn the body of the machine to the desired angle, reading off the position on the graduated scale located on the front section of the turntable body.

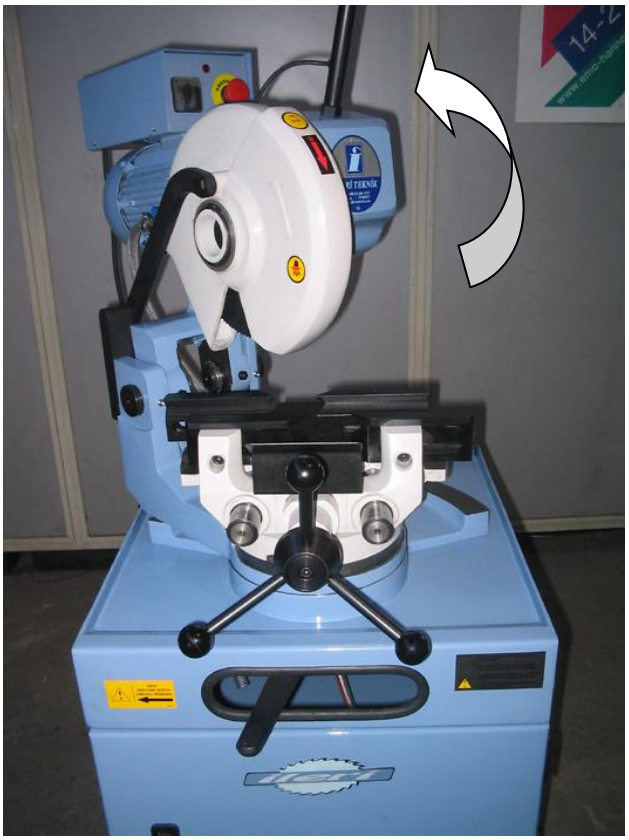

- Once the desired angle has been reached, **fix the body of the machine again by means of the locking lever.**
- The machine is now ready for making angled cut

- IMPORTANT:
- When making angled cuts, check before the cut that the blade does not touch the vice slide jaws.
- If it does:
- loosen the screw located above the vice slide jaw,
- move the jaw so that it does not touch the disk,
- tighten the screw while holding the jaw steady in its new position.

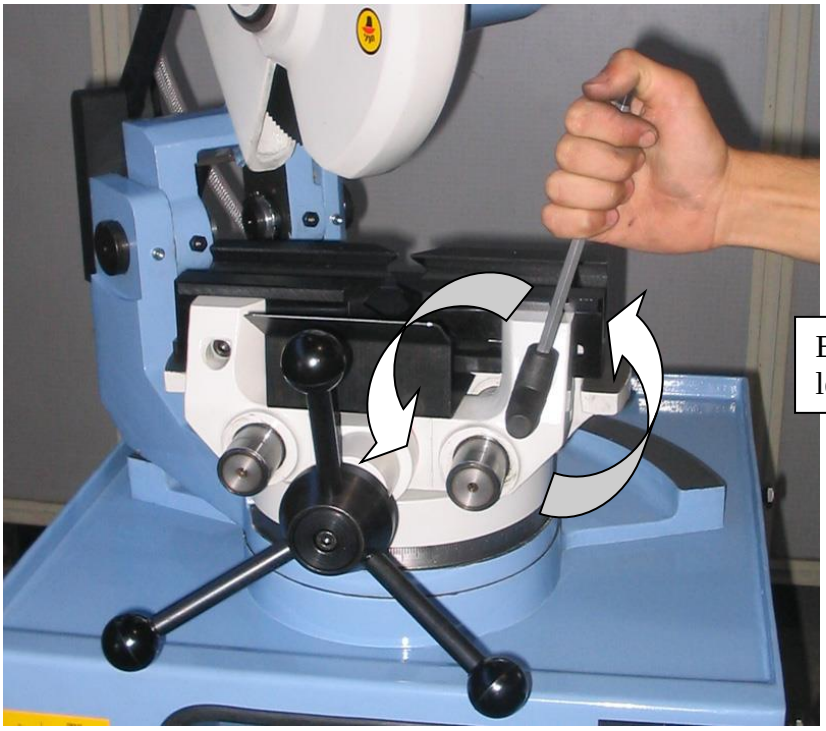

Back vice left

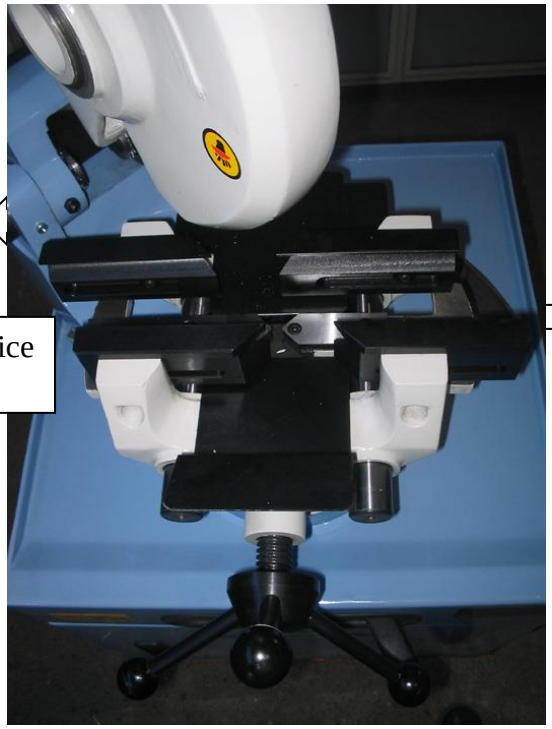

CHAPTER 5- ROUTINE AND SPECIAL MAINTENANCE

5.1. GENERAL MAINTENANCE

5.1.1. DAILY

- General cleaning of the machine to remove accumulated shavings.
- Top up to coolant level
- Check the wear of the blade and change if necessary.
- Check functionality of the shields.

5.1.2. WEEKLY

- More accurate general cleaning of the machine to remove shavings, especially lubricant fluid tank.
- Clean the vice and lubricate all the joints and sliding surfaces.
- Clean the disk housing

5.1.3. MONTHLY

- Check tightness of the screws on the motor, the pump, the jaws and shields.
- Thoroughly clean the water tank and all the machine.

5.2. TRANSMISSION BOX MAINTENANCE

- Change the oil in the transmission box after the first 100 working hours.
- After every 2000 working hours repeat the oil change operation.

5.2.1. OILS FOR TRANSMISSION BOX

- BP Energol GR/XP 460
- ARAL Degol BG 460
- KLUBER Sintheso 460 EP
- CASTROL Alpha SP 460
- API DT 460
- ELF Reductelf SP 460
- ESSO Spartan EP 460

6.1. STANDARDISED WIRING DIAGRAMS (CENELEC STANDARD)

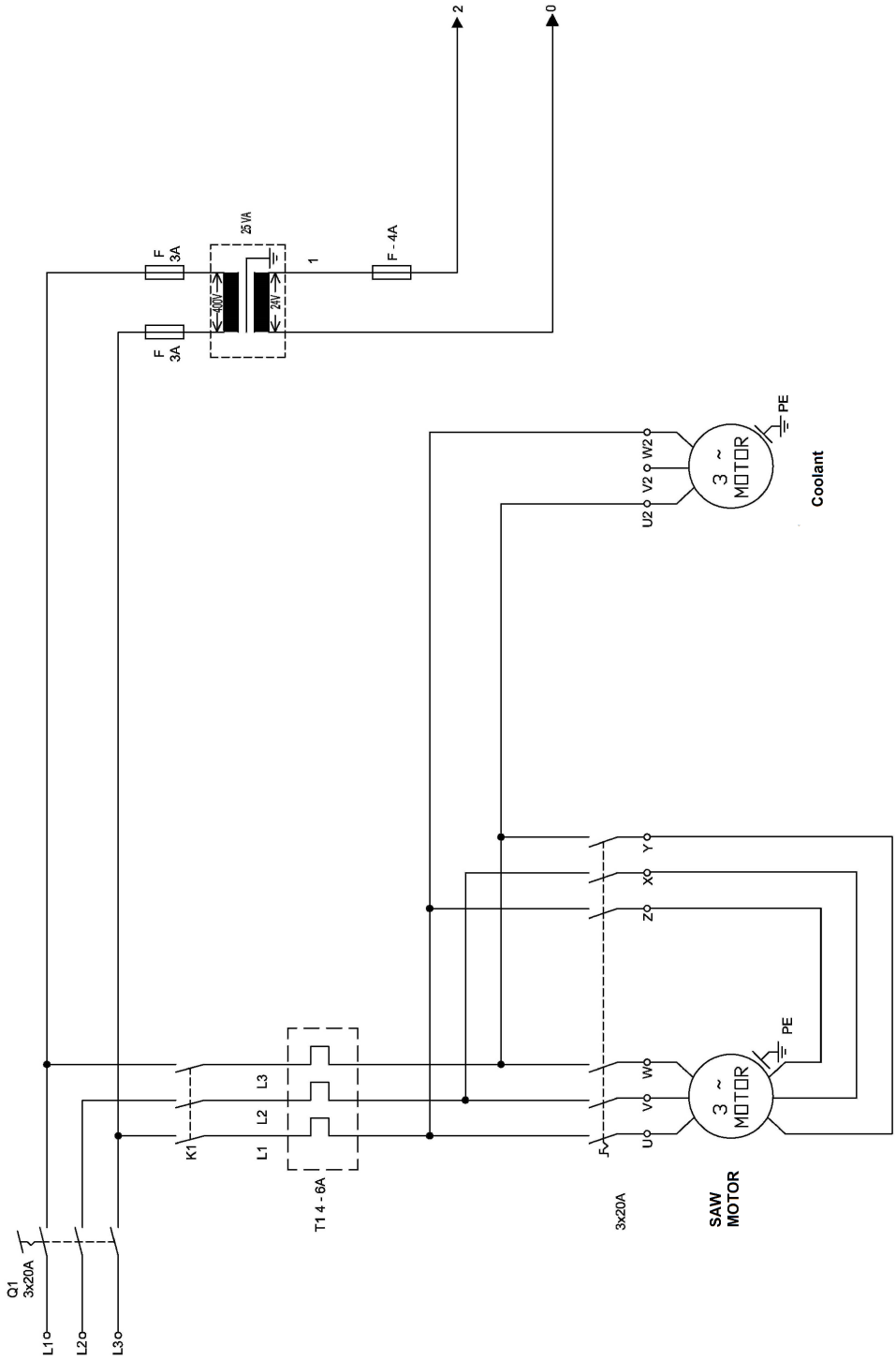

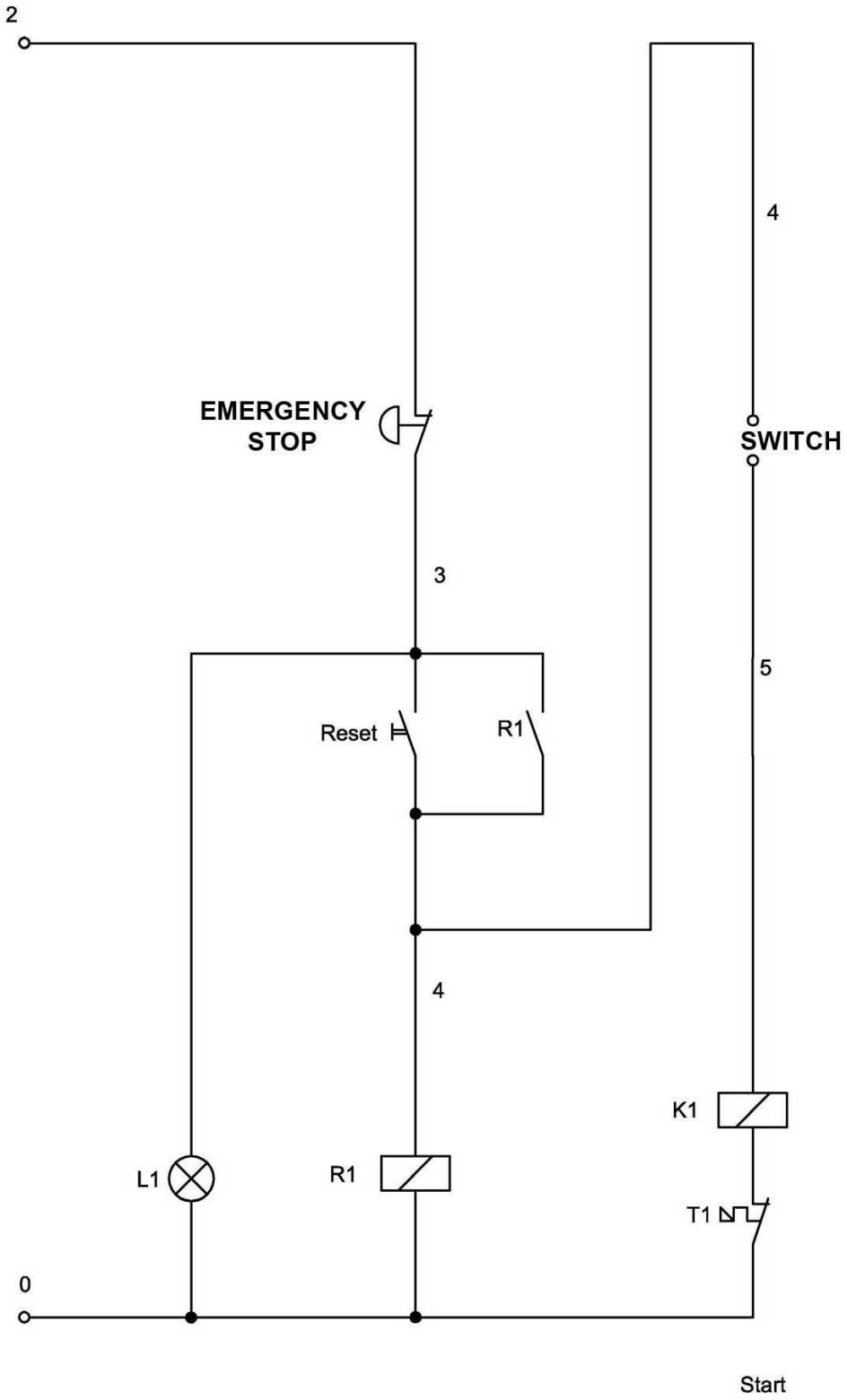
2
4
EMERGENCY
STOP
SWITCH
3
5
Reset
R1
4
K1
L1
R1
T1
0
Start

6.2. EXPLODED VIEWS

This part of the manual contains the exploded views of the MC-315 which will assist in gaining a thorough knowledge of the machine.

6.2.1. HEAD UNIT

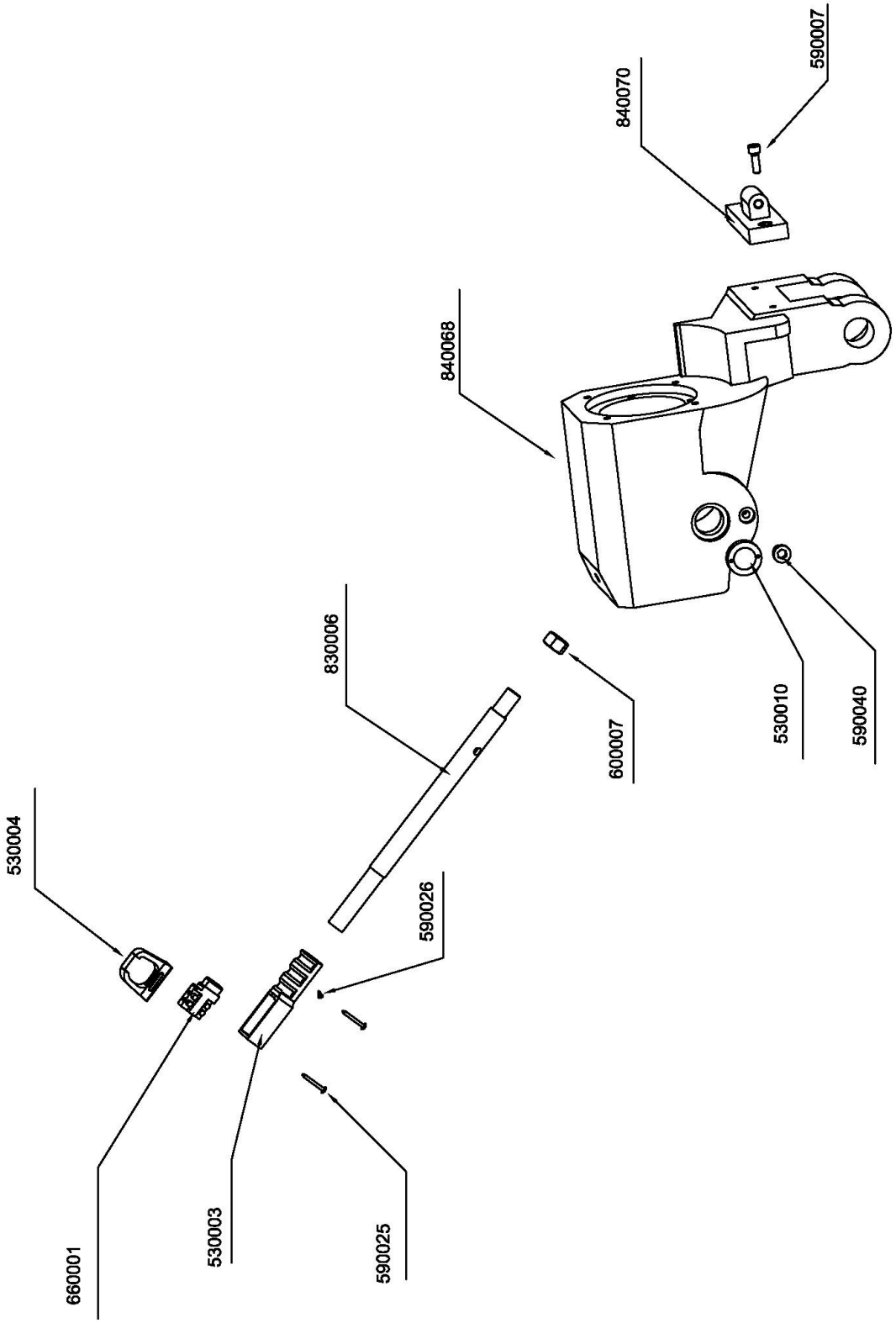

HEAD UNIT

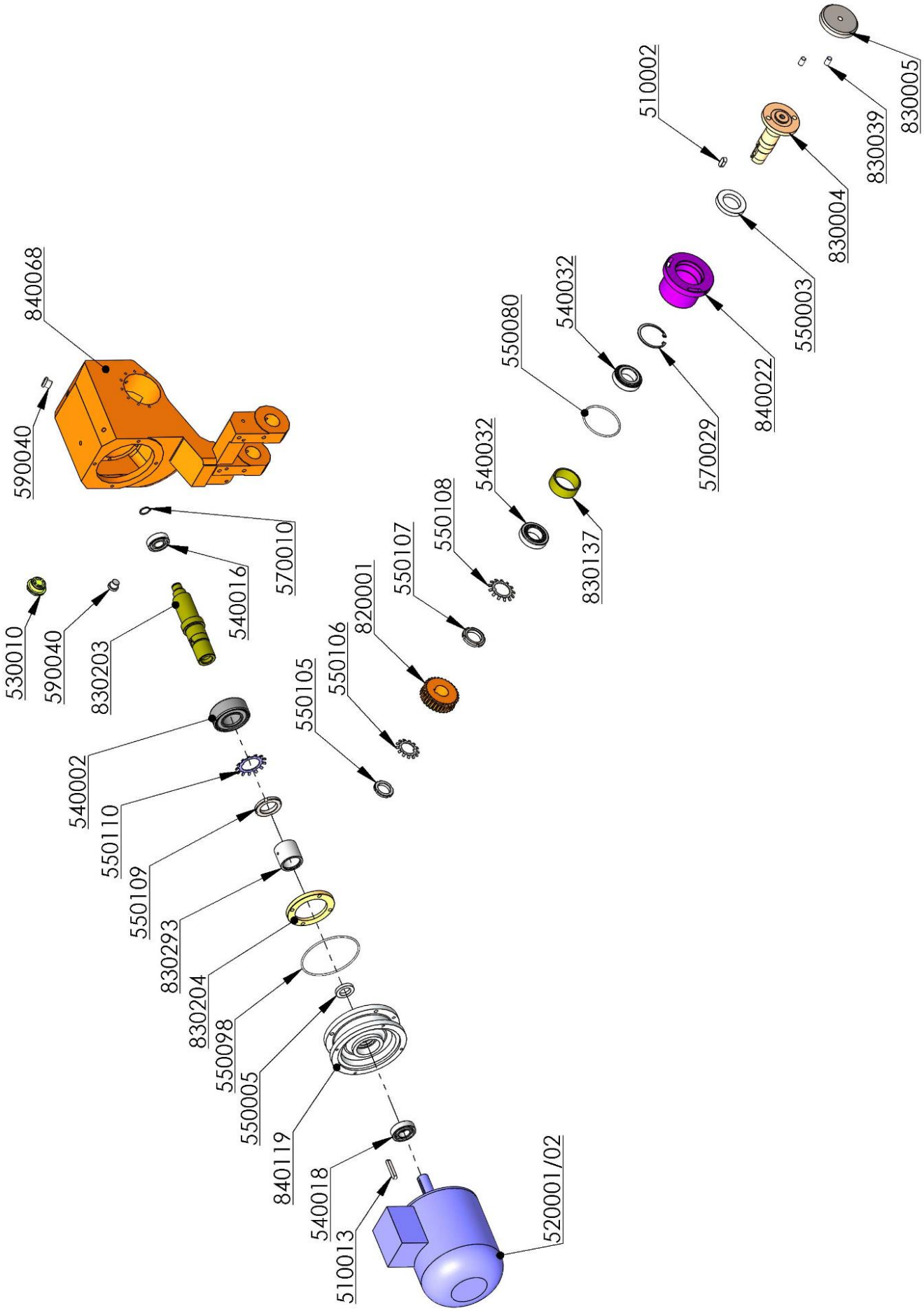
840068
590040
530010
590040
830203
540016
570010
540002
550110
550109
830293
830204
550098
550005
840119
540018
510013
520001/02
550105
550106
820001
550107
550108
540032
830137
550080
540032
570029
840022
550003
830004
510002
830039
830005

6.2.2. REVOLVING ARM
AND VICE UNIT

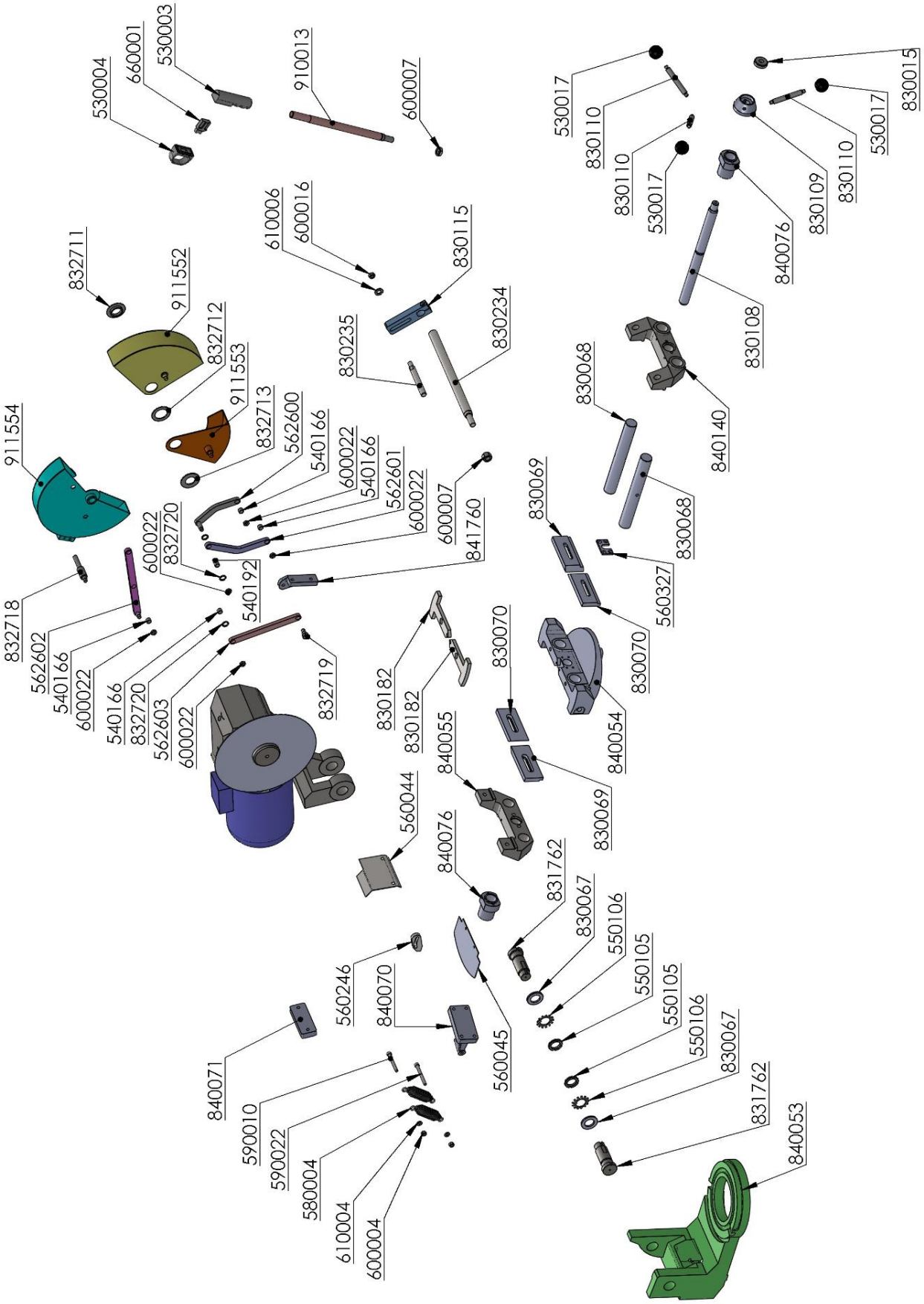

6.2.3. PEDESTAL AND COOLANT SYSTEM

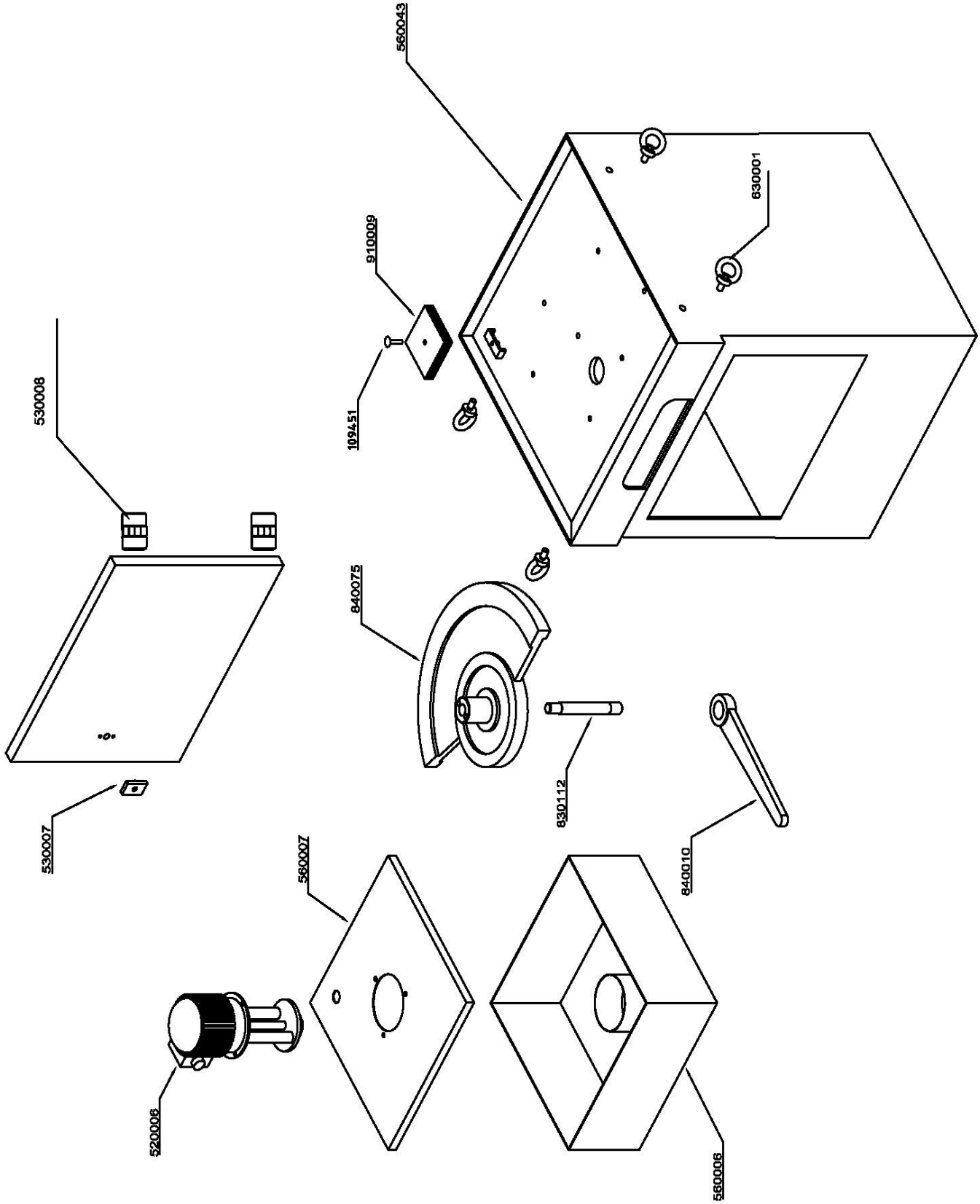

CHAPTER 7 - MATERIAL CLASSIFICATION AND CHOICE OF BLADE

7.1. CHOICE OF BLADE

Since the aim is to obtain excellent cutting quality, the various parameters such as hardness of the material, the size of the section, wall thickness, choice of the type of cutting disk, cutting and feeding speed, must be suitably combined.

7.1.1. TOOTH PITCH

As already stated, this depends on the following factors:

- Dimensions of the section
- Hardness of the material
- Thickness of the wall

DW		DW TW	
DW mm	Tooth Pitch mm	DW and TW mm	Tooth Pitch mm
10	6	10 TW=0,5	3-4
30	8	30 TW=1,5	4-5
50	10	50 TW=2,5	6-7
70	12	70 TW=3,5	8-9
90	14	90 TW=4,5	8-9
130	18	130 TW=6,5	10

Choice of tooth pitch.

KEY:

DW = Diameter or width of the solid piece to be cut in mm

TW = Thickness of the wall to be cut in mm

7.1.2. CUTTING AND FEEDING SPEED

- The cutting speed (m/min) and the advance speed (cm^2/mi=area travelled by the disk teeth when removing shavings) are limited by the development of heat close to the tips of the teeth. If the head feeding speed is too high, the cut will not be straight in either the vertical or the horizontal

plane. The cutting speed depends on the strength (kg/mm^2) and hardness (HRC) of the material and dimensions of the thickest section.

- Too high an advance speed (=disk descent) tends to cause the disk to deviate from the ideal cutting path, producing non rectilinear cuts on the vertical and the horizontal plane.

- The feeding speed depends on the cross-section of the material. Solid or thick-walled materials can be cut at low speed, while thin-walled materials such as tubes or thin profiles must be cut with a high feeding speed. A new blade requires a wearing-in period, during which time a feeding speed of about half-normal speed should be used.

7.1.3. LUBRICANT / COOLANT

The lubricating / cooling fluid must ensure that the blade teeth and material in the area of the cut do not overheat. Furthermore, the quantity and pressure must be sufficient to remove the swarf from the cutting zone. The fluid must be an excellent lubricant, such that prevents abrasion of the teeth and welding of the swarf to the teeth themselves (seizing).

7.1.4. BLADE STRUCTURE

The most commonly used blades are made of extra high speed steel (HHS) of normal quality (HHS/Dmo5) or superior quality (HHS/Mo5+Co5) with a treated tooth, which differentiates them from the former on account of the high value of structural resistance, greater resistance to seizing absence of stress in the mass and a better holding of lubricating coolant during work.

	D=	200		225		250		275		300		315		350		370		400	
SOLID SECTIONS	S	t z	t z	t z	t z	t z	t z	t z	t z	t z	t z	t z	t z	t z	t z	t z	t z	t z	t z
	10	5 130	6 100	5 140	6 120	5 160	6 128	5 180	6 140										
	30	6 100	8 80	6 120	8 80	6 128	8 100	6 140	8 110	6 160	8 120	7 140	8 120						
	50			8 90	10 70	8 100	10 80	8 110	10 90	8 120	10 90	8 120	10 100	9 120	10 110	10 110	11 100		
	70							10 90	12 70	10 90	12 80	10 100	12 80	11 100	12 90	11 100	12 90	10 120	12 100
	90									12 80	14 70	12 80	14 70	12 90	14 80	12 90	14 80	12 100	14 90
	110											12 80	14 70	12 90	14 80	12 90	14 80	12 100	14 90
	130													14 80	16 70	14 80	16 70	14 90	16 80
	150																	14 90	16 80
HOLLOW SECTIONS	D																		
	10	3 200	3 200	3 220	3 220	3 250	3 250	3 280	3 280										
	30	4 160	5 130	4 180	5 140	4 200	5 160	4 220	5 180	4 220	5 180	4 240	5 200						
	50			5 140	6 120	5 160	6 128	5 180	6 140	5 180	6 160	5 200	6 160	5 200	6 180	5 220	7 160		
	70							6 140	8 110	6 160	8 120	6 160	7 140	6 180	7 160	7 160	8 140	6 200	7 180
	90									8 120	10 100	7 140	8 120	7 160	8 140	7 160	8 140	7 180	8 160
	110											8 120	10 100	8 140	9 120	8 140	9 120	8 160	9 140
	130													9 120	10 110	9 120	10 110	9 140	10 120
	150															9 120	10 110	9 140	10 120

S=0,005xD

Blade selection table with respect to material sections.

RECOMMENDED CUTTING PARAMETERS			Mild steel R=350-500 N/mm²	Medium steel R=500-700 N/mm²	Hard steel R=750-950 N/mm²	Super Hard steel R=950-1000 N/mm²	Hardened and tempered steel	Austenitic stainless steel R=500-800 N/mm²	Martensitic stainless steel R=500-800 N/mm²	Grey cast iron	Aluminium and alloys R=200-400 N/mm²	Aluminium and alloys R=350-500 N/mm²	Copper R=300-500 N/mm²	Hard bronze R=600-900 N/mm²	Phosphor bronze R=400-600 N/mm²	Brass R=200-400 N/mm²	Alloyed brass R=400-700 N/mm²	Titanium and alloys R=300-800 N/mm²	Tubes and beams 0.005D R=300-600 N/mm²	Tubes and beams 0.25 D R=300-600 N/mm²
CUTTING ANGLE		α	20	18	15	12	10	12	15	12	22	20	20	15	12	16	12	18	18	15
		γ	8	8	8	6	6	8	6	8	10	8	10	8	8	16	16	8	8	8
CUTTING SECTION (IN MM)	10-20	T mm	5	4	4	3	2	4	4	4	6	5	6	5	4	5	5	4	3	2
		Vt m/1′	50	30	20	15	9	20	20	25	1100	200	400	400	120	600	500	50	19	35
		Av mm/1′	160	130	110	60	35	50	50	100	1800	400	600	800	160	1100	700	160	130	130
	20-40	T mm	7	6	6	4	3	6	6	6	8	7	8	7	8	6	7	4	4	3
		Vt m/1′	45	30	20	15	9	19	19	23	1000	180	350	400	110	600	400	45	18	33
		Av mm/1′	150	120	110	60	33	45	45	100	1700	400	600	700	150	1100	600	150	120	120
	40-60	T mm	10	9	8	6	4	8	8	8	12	10	11	10	8	10	10	6	5	4
		Vt m/1′	45	25	18	14	9	18	18	22	900	160	300	350	100	550	350	45	18	30
		Av mm/1′	140	110	100	50	30	45	45	90	1600	350	550	700	140	1000	600	140	110	110
	60-90	T mm	12	12	11	9	6	11	11	11	16	12	14	12	10	12	12	10	6	5
		Vt m/1′	40	25	17	14	8	17	17	20	800	160	250	300	90	550	350	45	17	30
		Av mm/1′	130	110	50	50	28	40	40	80	1400	300	550	600	130	900	500	130	110	110
	90-110	T mm	14	14	14	12	8	14	14	14	18	14	17	14	12	16	16	12	6	5
		Vt m/1′	40	20	15	13	8	15	15	19	700	140	200	250	70	500	300	40	16	28
		Av mm/1′	110	100	80	45	25	40	40	880	1300	300	500	600	110	900	500	110	100	100
	110-130	T mm	16	16	16	14	10	16	16	16	20	16	18	16	14	18	18	14	8	6
		Vt m/1′	35	20	14	13	7	14	14	17	600	130	150	200	60	500	300	35	16	26
		Av mm/1′	100	90	70	45	25	35	35	70	1100	250	500	500	100	800	400	100	90	90
	130-150	T mm	18	16	16	14	12	16	16	16	20	16	20	18	16	18	18	16	10	6
		Vt m/1′	30	15	12	12	7	12	12	16	500	130	120	150	50	450	200	30	15	24
		Av mm/1′	90	80	60	40	22	35	35	60	900	250	400	400	90	800	400	90	80	80
RECOMMENDED LUBRICANTS			Emulsion – Cutting Oil							Dry	Dry		Emulsion			Cutting Oil			Emulsion	

Blade Section table with respect to cutting speed and downstroke speed.

7.2. CLASIFICATION OF STEELS

Types of Steel				Hardness		
UNI	DIN	BS	AISI	Brinel HB	Rockw.	Kg/mm^2
C 22-C 35	CK 22 - CK 3	En 2 C – En 6	1022 - 1035	160 – 170	34 – 87	55 – 59
C 45	CK 45	En 8	1040	160 – 180	84 – 89	55 – 61
C10-C 15	CK 10- CK 15	En 32 A – En 328	1010 – 1015	150 – 175	81 – 87	51 – 59
C 60	CK 60	En 9	1060	160 – 180	84 – 89	55 – 61
		4360 – 50A		160 – 180	84 – 89	55 – 61
	17100	3706 – 1.2.3.	ASTMA- 36/68	160 –180	84 – 89	55 – 61
45 Cr Si 9	17115	4360		160 – 180	84 – 89	55 – 61
		En 20 A		190 – 215	91 – 97	64 – 73
34 Cr Mo 5	17221	970 - 1955	1065	180 – 205	89 – 94	61 – 69
		En 18 B	5135 - 5145	180 – 200	89 – 93	61 – 67
35 Cr Mo 4	34 Cr Mo	En 19 B	4135	200 – 230	93 – 99	67 – 77
	36 Ni Cr 6	En 111	3135	190 – 230	91 – 99	64 – 77
		En 36	3310 – 3315	200 – 230	93 – 99	67 – 77
20 Nc Cr Mo 2		En 362	4315	200 – 225	93 – 98	67 – 75
		En 100 D	8645	190 – 220	91 – 97	64 – 74
	1880 X C 95	DX	W 1	150 – 190	80 – 91	51 – 64
100 Cr 6	100 Cr 6	En 31	52100	210 – 230	96 – 99	71 – 77
		B 2	L 6	190 – 230	91 – 99	64 – 77
52 Nc Cr Mo KU	56 Ni Cr Mo V 7			217 – 248	97 – 102	73 – 83
	2750 (280W18)	18 % W	T 1	217 – 248	97 – 102	73 - 83
		1507 – 825	1310	160 – 220	84 – 91	55 – 64
		A2	M 13	200 – 230	93 – 99	67 – 77
	210 Cr 46	A1	D 3	215 – 240	97 – 101	73 – 81
	4845	En 58 G	309 S	150 – 200	80 – 93	51 – 67
X 12 Cr 13	4001	En 56 A	410	150 – 200	80 – 93	51 – 67
X 6 Cr Ni 1810	4301	En 58 E	304	130 – 170	74 – 86	45 – 58
X Cr Ni 1910						
X 8 Cr Ni Mo 1713	4401	1501 – 845	316	160 – 200	84 – 93	55 – 67
Phosphor bronze				60 – 100	56,5	36
Aluminium bronze				70 – 90	49	32
Manganese bronze				95 – 120	51 – 69	34 – 42
Silicon bronze				70 – 100	56,5	36

Information on materials to cut, enabling their classification with respect to hardness and consequently the correct blade to use.

7.2.1. STEEL NOMENCLATURE TABLE

Material	SS Sweden	AISI U.S.A.	DIN Germany	BS Great Britain	UNI Italy	AFNOR France
Carbon steels	1311 1572	1015 - 1035	C 22 – C 35 20 Mn 5 – 28 Mn 6 CK 22 – CK 50	050 A 20 080 M 46 – 50 120 M 19 150 M 28	C15 – C35 C 22 Mn C 28 Mn	XC 18 XC 38 H 1 20 M 5
Carbon steels	1650 1880	1040 – 1064 1770 - 1880	CK 60 – CK 101 36 Mn 5 Cm 45 – Cm 55	060 A 40–060 A 96 070 M 55 080 A 40 – 080 A 62	C45 – C60	XC 60 – XC 75 40 M 5 XC 42 H 1 XC 55 H 1
Alloy steels	2120 2255	1335 – 1345 4130 - 4140	25 Cr Mo 4 – 42 Cr Mo 4	1717 CDS 110 708 A 37 708 M 40	25 Cr Mo 4 – 42 Cr Mo 4	25 CD 4 42 CD 4
Alloy steels	2541 2230 2258	4337 – 4340 50100 – 52100 6145 – 6152 8630 - 8645	40 Ni Cr Mo 6 40 Ni Cr Mo 73 34 Cr Ni Mo 6, 100 Cr 6	735 A 50, 534 A 99 817 M 40 311 tipo 6 e 7	40 Ni Cr Mo 2 - 40 Ni Cr Mo 7 30 Ni Cr Mo8-35 Ni Cr Mo 6KB 50 Cr V 4, 100 Cr 6	35 NCD 6 50 CV 4 100 C 6
Tool steels	2310 – 12 2754 – 55	D – 2, D – 3	X 210 Cr 12 X 155 Cr V Mo 121	BD 2, BD 3	X 205 Cr 12 KU X 155 Cr V Mo 121 KU	Z 160 CVD 12 Z 200 C 12
Tool steels	2550 2710	S – 1	60 W Cr V 7 55 Ni Cr Mo V 6	BS 1	55 W Cr V 8 Ku 55 Ni Cr Mo V 6	55 NCVD 7
Stainless steels	2324 2333	201, 202 302, 304	X 2 Cr Ni 189 X 5 Cr Ni 189 G – X 2 Cr Ni 189	304 S 15 304 C 12 304 S 12	X 2 Cr Ni 18.11 X 5 Cr Ni 18.10 G - X 2 Cr Ni 19.10	Z 2 CN 18.10 Z 6 CN 18.09 Z 3 CN 19.10
Stainless steels	2343 2353	314, 316 317	X 15 Cr Ni Si 2520 X 5 Cr Ni Mo 1812 X 5 Cr Ni Mo 1713	316 S 16 317 S 16	X 16 Cr Ni Si 2520 X 5 Cr Ni Mo 1713 X 5 Cr Ni Mo 1815	Z 12 CNS 25.20 Z 6 CND 17.12

Steel Nomenclature Table

CHAPTER 8- TROUBLE SHOOTING

PROBLEM	PROBABLE CAUSE	SOLUTION
TEETH BREAKING	Wrong cutting speed	Change blade speed
	Material too hard	Check the cutting speed, feed speed and disk pressure parameters and the type of disc you are using.
	Incorrect lubricant/coolant fluid	Check the water and oil emulsion. Check that the holes and hoses are not blocked; direct the nozzles correctly.
	Low quality disc	Use a better-quality disc.
	Disc not warn-in correctly	With a new disc if it is necessary to start cutting at half feeding speed. After the wearing-in period the cutting and feed speeds can be brought up to normal values.
BROKEN DISC	Vibrations	The workpiece vibrates in the clamp. Check that the slide is adjusted correctly. Check the pressure with which the workpiece is clamped and if necessary, increase.
	Head speed too high	Reduce head speed.
	Incorrect lubricant/coolant fluid	Check the water and oil emulsion. Check that the holes and hoses are not blocked; direct the nozzles correctly.

	Teeth in contact with material before starting the cut	Always check the position of the blade before starting a new job.
PROBLEM	**PROBABLE CAUSE**	**SOLUTION**
PREMATURE DISK WEAR	Wrong cutting speed Unsuitable tooth profile Wrong teeth pitch Low quality disc Incorrect lubricant/coolant fluid	Change the disk speed. Choose a suitable disk. Choose a suitable disk. Use a better-quality disc. Check the water and oil emulsion. Check that the holes and hoses are not blocked.
DISK VIBRATION	Wrong teeth pitch Ineffective gripping of the part in the vice. Dimensions of the solid section too large with respect to the maximum admissible cutting dimensions	Choose a suitable disc. Check the gripping of the part. Abide by the instructions.
CUTS NOT 90°(OR ANGLED)	Disc with worn teeth Head speed too high Cutting speed too low Broken teeth	Replace the disc Reduce head speed Increase cutting speed Check the hardness of the material being cut
	Electrical power supply	Check: The plug The phases The cables

SPINDLE MOTOR **WIIL NOT TURN**	Fuses Short circuits	The socket Also check that the motor connections are in place. Check for efficiency Identify and eliminate
PROBLEM	**PROBABLE CAUSE**	**SOLUTION**
SPINDLE MOTOR **WIIL NOT TURN**	Emergency stop button in Reset / start button off Contactors Thermal relay Motor	Turn it clockwise through 1/4 of a turn to release it. Push the green reset/start button Check that the phases in it are present both on the input and output, that it is not jammed, that it closes when powered and that it is not causing short circuits. Change if any of these problems are found. Make sure it is closed, check that the phases are present in input and output, that it is not causing short circuits and responds when the reset coil is closed. If it has tripped to protect the motor, check that the absorption values are balanced and do not exceed the motor's rated values. Change if necessary. Check that it has not burnt out, that it turns freely and that there is no moisture in the connection terminal board box. The winding can be rewound or replaced.

CHAPTER 9- NOISE TESTS

Conditions for measurement

Tested Machine: MC-315 – Blade size: 315X2X32 mm
Material in use: Ø60X2 mm Mild steel pipe

Enviromental Conditions :

(20 ± 5) °C
(50 ± 10) %Rh

Measurement Uncertainty :

4 dB (A)

The reported expanded uncertainty of measurement is stated as the standard uncertainty of measurement multiplied by the coverage factor k=2 which for normal distribution corresponds to a coverage probability of approximately 95%.

Nominal sound pressure level in warehouse

Lpfa,1m=56,3 dB(A)
-testing appropriate EN ISO 11202 Acoustics - Noise emitted by machinery and equipment - Determination of emission sound pressure levels at a workstation and at other specified positions applying approximate environmental corrections-

N**ominal sound power level**

Power level lwA=86,5 dB(A)

Measurement	1	87	dB(A)
Measurement	2	92	dB(A)
Measurement	3	82	dB(A)
Measurement	4	85	dB(A)

Average: 86,5 dB(A)

Measurements were made while the machine was cutting.

Values for noise are level of issue and it doesn't state it's on safe working level. Even there is a connection between İssue and exposure levels, this cannot be used safely to decide if advanced precautions are needed. Factors that affect the real level of exposure that effects work force are depending on features of warehouse, (other sources of noise, other works nearby, and quantity of machines) including exposure time
Allowed level of exposure may change from country to another. Beside these, this information lets the operator to consider the dangers and risks.

Vertical Plate Saws
Horizontal Billet Saws
NC/CNC Band Saws
Structural Miter-Cutting Saws
Automatic Band Saws
Circular Saws
Table Top Saws

Visit our website at

www.cosenemea.com

COSEN MECHATRONICS CO., LTD.