Bandsaw Specialist

F-F-31
Version 3

Instruction Manual

Model AH-1010JAY

Automatic Horizontal

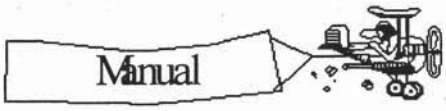

COSEN MACHINERY INDUSTRIAL CO.,LTD.

NOTICE: Please read this instruction manual carefully to obtain a thorough knowledge of installation, operation and maintenance. Please remember the following: Correctly operate the machine as described in the manual to prevent accident. Do not operate the machine by guesswork. We suggest you always keep manual at hand and refer to it whenever you are not sure of how to perform any procedures for AH-1010JAY.

TECHNICAL ADVICE/ SPARE PARTS

☎ Please contact the COSEN-representative in your local area in case you need any technical advice or if you want to order spare parts.

Instruction Manual:

AH-1010JAY Horizontal Bandsaw

Ver. 3 -- Date : 06/09/2019

110 Ching-Fu Street Hsin-Chu 300, Taiwan, R.O.C.

Tel: 886-3-5332143~5 Fax: 886-3-5348324

Printed in Taiwan

Foreword

FROM THE MANUFACTURER

You have just purchased a machine manufactured by the COSEN Machinery Industrial Co., Ltd. We'd like to take this chance to express our appreciation to you for being our valued customer. Any comment from you will help us to design a better product or provide a better service for you.

The band saw machine will provide low cost cutting accuracy for many years if the procedures for installation, operation, maintenance and troubleshooting are followed. However, if there are questions, please contact our agent or our factory for the nearest service or sales representative.

Enough, already. I hope you find ***COSEN*** as incredibly smart as I do. If you have any suggestions for improvement, please tell us, we will appreciate your help.

"again"

Thank you so much for purchasing ***COSEN*** band saw machine.

Mike Huang

President

COSEN Machinery Industrial Co., Ltd.

SAFETY

1. Know your band saw. Read the operator's manual carefully. Learn the operation, application and limitation. Realize the specific potential hazards peculiar to this band saw.
2. Use recommended accessories. Improper accessories may be hazardous.
3. Wear proper apparel.
4. Keep unnecessary people away.
   * Do not overreach or stand on tool.
5. Avoid dangerous environment. Do not use band saw in damp or wet locations. Keep work area well illuminated.
6. Keep work area clean. Cluttered and slippery floors invite accidents.
7. Remove adjusting keys and wrenches from band saw before turning on power.
8. Avoid accidental starting. Make sure switch is off before plugging in power cord.
9. Do not force band saw. It is safer to operate with the cutting rate for which it was designed.
10. Never hand hold the material with saw in horizontal position. Always use the vise, and clamp securely.
11. Keep belt guard and wheel covers in place and in working order.
12. When a workpiece is too long or heavy, support it from the floor.
13. Always remember to switch off the machine when the work is completed.
14. Disconnect power cord before adjusting, servicing and changing blade.
15. Check damaged parts. Before further use of the tool, a guard or other parts that is damaged should be carefully checked. To assure that it will operate properly and perform its intended function.
16. Moving parts should keep in an alignment and binding. Check for breakage, mounting and any other conditions that may affect its operation. Any damaged part or guard should be properly repaired or replaced.
17. Use a sharp blade and keep tool clean for best and safest performance.
18. Safety is a combination of operator's common sense and alertness at all times when the saw is functioning.
19. Maintaining the band saw in top condition is essential for safety.

■ Never wear gloves loose clothing when operating the machine. They may cause danger if they are caught in a running machine.

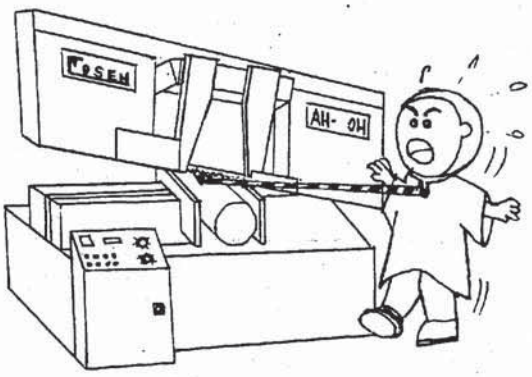

■ Be sure to confirm that the area around the machine is cleared of people and obstacles every time before starting the machine or operation.

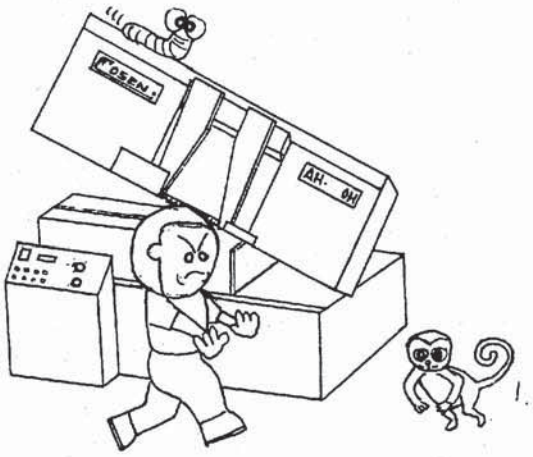

■ Use a water-soluble cutting fluid on this machine. Oil-based cutting fluids may emit smoke or catch fire, depending on the condition of their use.

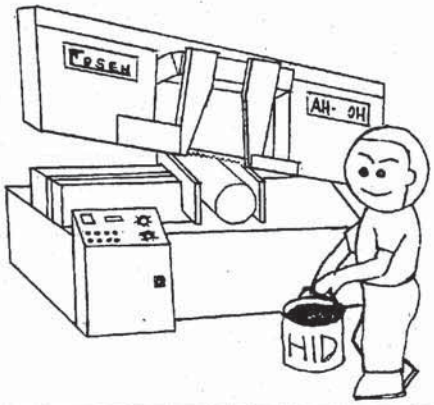

■ Never try to adjust the wire brush on the saw blade or remove chips when the saw blade is running. It is dangerous if hands or clothing are caught by the running blade.

■ Never cut carbon or any other material that produces and disperses explosive dust on this machine. Sparks from motors and other machine parts may ignite and explode the air-borne dust. The machine needs special measures for cutting explosive materials.

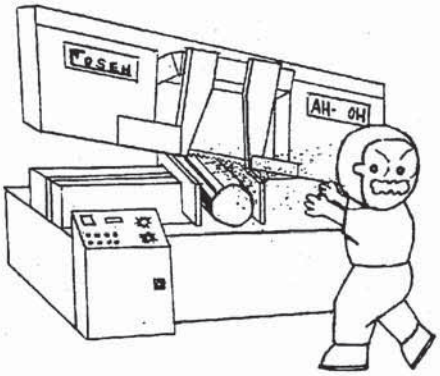

■ Stop the saw blade before you clean the machine. It is dangerous if hands or clothing are caught by the running blade.

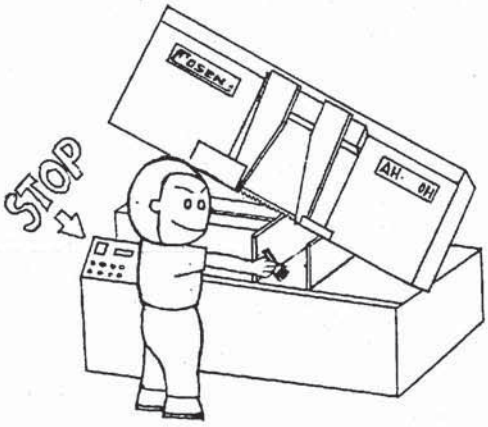

■ Be sure to prohibit any use of fire in the shop, and install a fire extinguisher or other fire control device near the machine when cutting titanium, magnesium, or any other material that produces flammable chips. Never operate the machine unattended when cutting flammable materials.

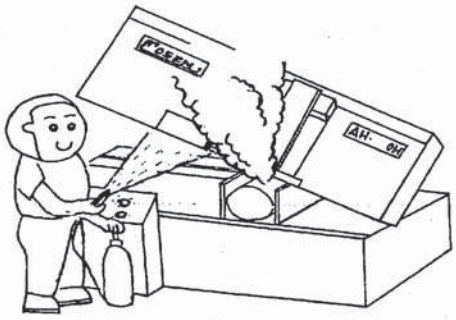

■ Use roller tables on both front and rear sides of the machine when cutting the long work. It is dangerous if the work falls off the machine when the roller tables are not used.

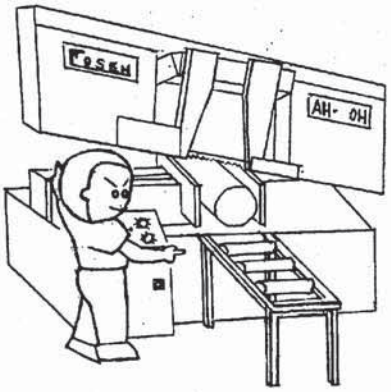

■ Take preventive measures when cutting thin or short pieces from the work to keep them from falling. It is dangerous if the cut piece falls.

■ Never start the saw blade unless it has been confirmed that the work is firmly clamped. If the work is not securely clamped with the vise, pieces will be forced out of the vise during cutting.

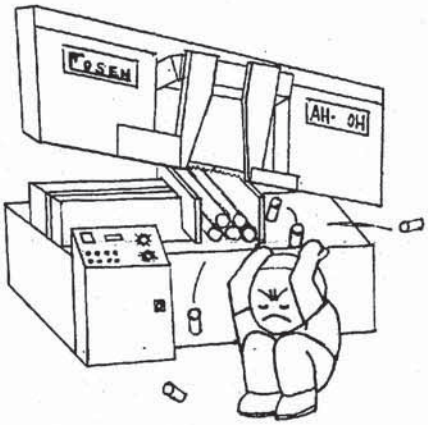

■ Never touch the running saw blade. It is dangerous if your hands or clothing are caught by the running blade.

■ Never step or stand on the roller table. It is dangerous if your foot slips on the rollers and you fall.

■ Turn off the shop circuit breaker switch before servicing the machine. Then post a sign to inform people that the machine is under maintenance.

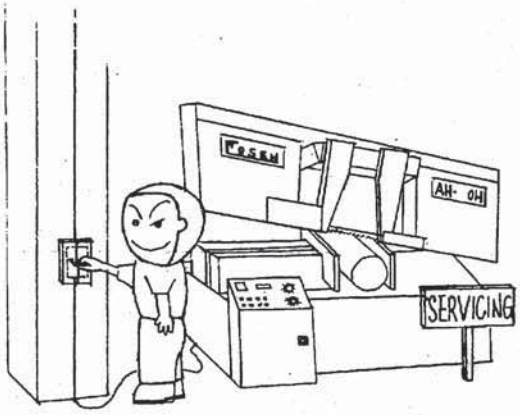

TABLE OF Contents

Section 1

GENERAL INFORMATION

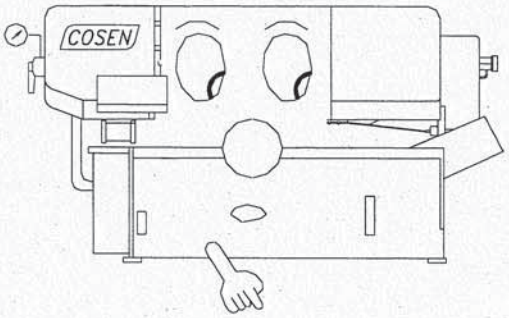

SECTION 1

GENERAL INFORMATION

1.1 INTRODUCTION

COSEN is one of the bandsaw makers who have manufactured the machines for more than two decades and COSEN is devoted to the research and development of advanced technology to improve the quality and safety of bandsaws.

Almost all of the countries lay emphasis on the safety design concept in order to envisage the coming next century. As a machinery industrial company, COSEN continues to follow this central concept of excluding all sources of possible injury or damage to health from bandsaw operation.

However, the customer's confidence depends not only on the quality of the products and the reputation of the market but also the certification of a notified body, although COSEN believed that the former two terms had been well achieved for her products.

Recently one thing happened and it could be considered as a great milestone for COSEN to get into the-state-of-the-art technology, that was, after the outside assistance of a notified body, AMTRI VERITAS Limited, COSEN had obtained the **CE DESIGNATION**, a national standard which was approved by ECS (European Committee for Standardization).

COSEN metal cutting bandsaw is an ideal tool for the machine shop, metal fabricating shop, school and limited run production work.

Your machine is designed to cut the metal materials and possesses the following advantages,

- Machinery or each component can be handled safely.
- Machinery or each component can be easily removed, replaced or operated by the user.
- Machinery or each component has passed the strictly testing (Council Directive on the approximation of the laws of the Member States relating to Machinery)

This manual is divided into ten sections including shipping, handling, unpacking, initial checkout, operation, and maintenance. Each section covers a specific aspect of the machine.

Thank you so much for using this semi-automatic horizontal bandsaw.

1.2 EQUIPMENT DESCRIPTION

Your machine is designed under the guideline of low cost and high performance. The features are described below,

- Straight cutting with easy set-up and high precision positioning.
- Heavy duty motor, rigid reducer and variable drive assembly with excellent mechanical design feature the increasing demand for production cutting.
- Also applicable for structural steel processing, such as pipe, channel, H beam, angle and bar stock with automatic roller feeding.
- Amply-dimensioned machine base and saw frame allows easy operating.
- Centralized Knee-type front control box (main electrical box).
- The blade guidance mounted with bearings and carbide faced inserts maintains the stability of machining and reduces the vibrations of cutting. This produces high degree of cutting accuracy and a long blade life.
- The cast iron dovetail slide guide and guide arms construct the unique characteristics of rigidity and stability.
- This machine is designed to prevent the operator from accidental access to moving elements during operation by using safety guards.
- If the saw blade is broken during the cutting period, the machine will stop automatically.

1.3 SPECIFICATIONS

SPECIFICATION

MODEL		AH-1010JAY
MAX. CAPACITY	●	250 mm (10")
	■	250 H × 250 W (10" × 10")
CUTTING SPEED RANGE	60 Hz	29,46,65,98 (m/min.) 95,151,213,321 (ft/min.)
	50 Hz	24,38,53,81 (m/min.) 79,125,174,266 (ft/min.)
MOTOR OUTPUT	SAW BLADE	1.125 kw
	HYDRAULIC	0.18 kw
	COOLANT	0.1 kw
BLADE SIZE		3353 mm × 25 mm × 0.9 mm (11' × 1" × 0.035")
HEIGHT OF WORK BED		650 mm (25.5")
FLOOR SPACE	LENGTH	1600 mm (63")
	WIDTH	710 mm (28")
	HEIGHT	1080 mm (42.5")
MACHINE WEIGHT		450 Kg (995 LBS)
STANDARD ACCESSORIES	HEXAGON WRENCH	ONE SET (1.5 mm - 10 mm)
	BLADE	ONE PIECE
	BRUSH	ONE PIECES
	MATERIAL STOP	ONCE PIECE
	ELECTRIC SYSTEM	ONE UNIT
	COMPLETE COOLANT SYSTEM	ONE UNIT

* Design and specifications are subjected to change without notice.

1.4 IDENTIFICATION AND TERMINOLOGY OF THE MACHINE

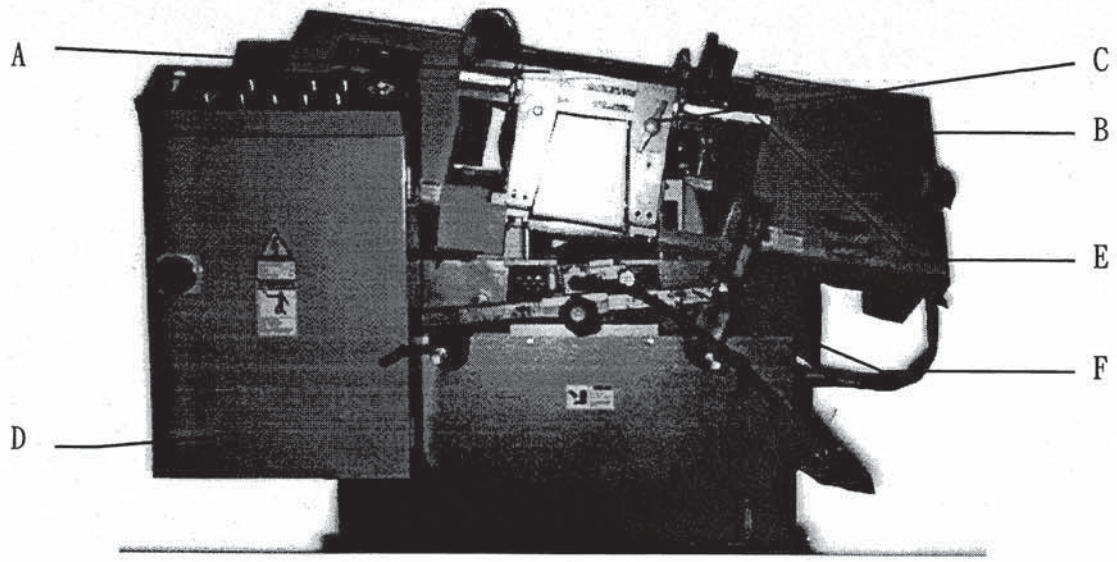

A. Dovetail Slide Guide

B. Drive Wheel Cover

C. Arm Fixing Handle

D. Electrical Box and Control Panel

E. Dovetail Gauge Plate

F. Stopper

FRONT VIEW

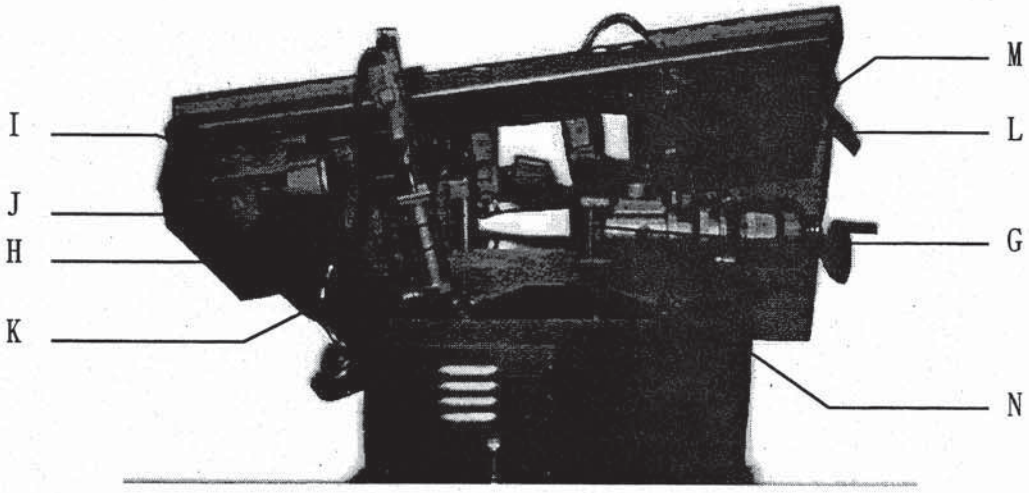

G. Fixed Vise Jaw

H. Movable Vise Jaw

I. Motor

J. Pulley Cover

K. Hydraulic Feed Cylinder

L. Blade Tension Adjustment Handle

M. Idle Wheel Tension Adjustment Slide

N. Bed

REAR VIEW

1.5 SAFETY DEVICES AND SAFETY GUARDS

The locations of the safety devices and guards are shown in Fig. 1.1 and Fig. 1.2 below,

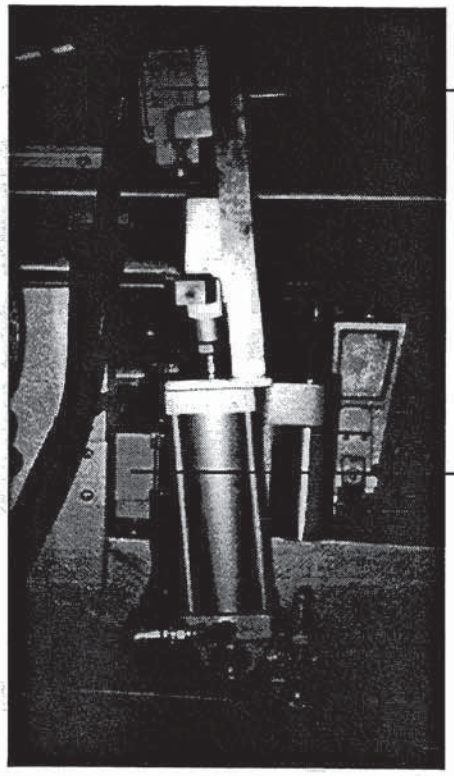

1. Limit Switch
2. Limit Switch
3. Emergency Stop Button
4. Interlock Switch (Door)
5. Interlock Switch (Band Wheel Cover)

Fig. 1.1 Safety Devices (Electric System)

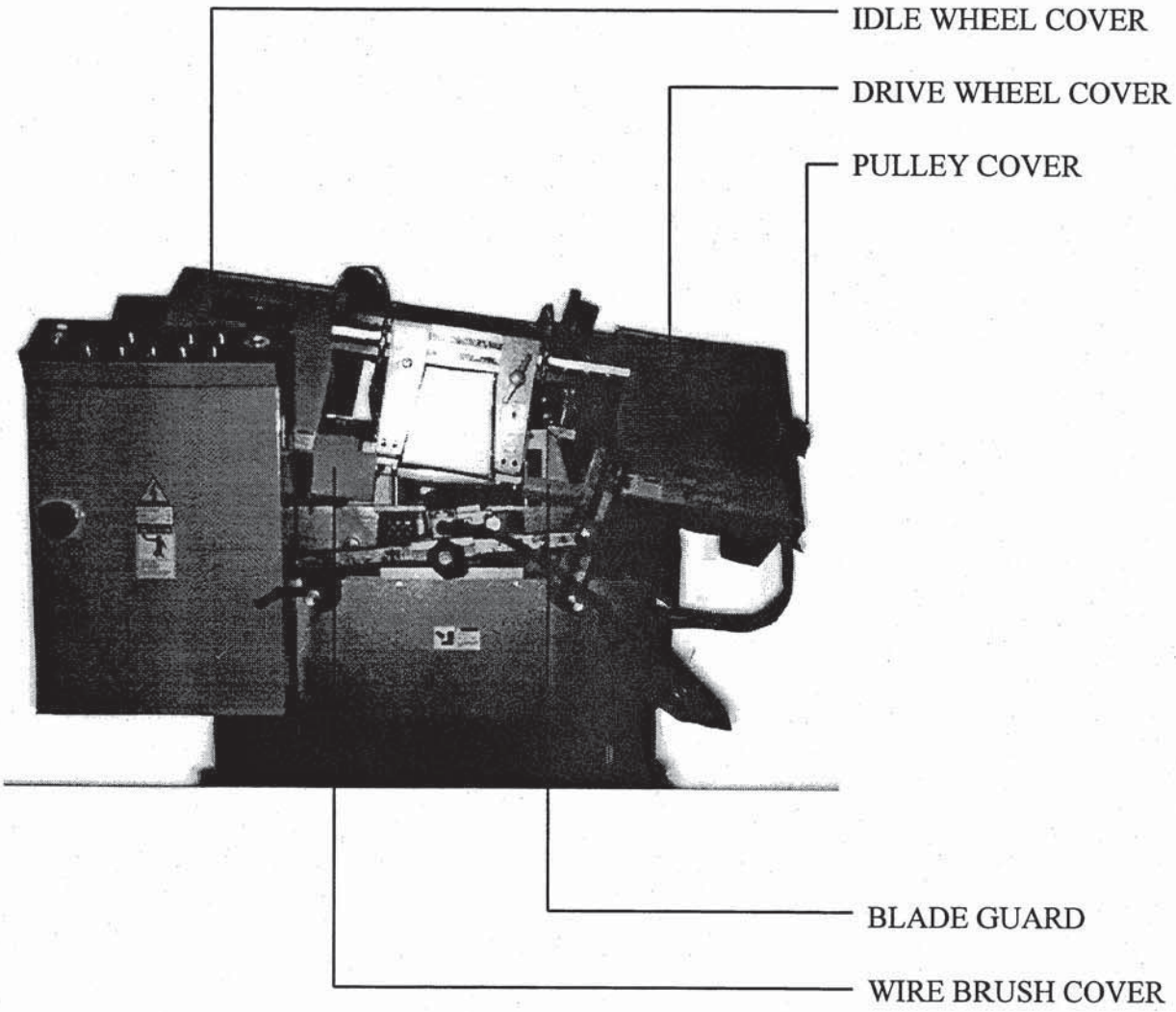

Fig. 1.2 Safety Guards

1.6 NOISE LEVEL

Noise is a very important environmental concern at the work site.

- Excessive exposure to high levels of noise may cause injury to the hearing, but the sensitivity to hearing loss varies between individuals and must be taken into account in specifying an allowable limit for noise exposure.
- A level of 90 dBA is widely accepted as a criterion for 8h/day exposure to steady-state broad-band noise.
- The unprotected ear should not be exposed to noise levels higher than 120 dBA.

The noise of the machine comes from the following sources,

1. Saw blade during cutting
2. Wire brush unit
3. Chip conveyor unit
4. Speed reducer
5. Hydraulic motor / pump
6. Belt transmissions variable speed motors
7. Blade motor
8. Drive wheels
9. Parts not secured tightly causing mechanical vibration

The noise level of this machine has passed noise testing criterion (under 70 dBA). Please refer to the system troubleshooting in section 10 if abnormal noise occurs.

Section 2

MOVING AND INSTALLATIONS

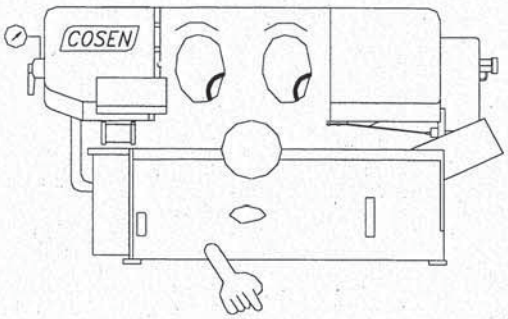

SECTION 2

MOVING AND INSTALLATION

2.1 INTRODUCTION

Your machine is composed of three main systems, named
Mechanical System,
Hydraulic System, and
Electrical Control System.

Please read the manual carefully to obtain a thorough knowledge of the machine and its moving & installation. Correctly operate the machine as described in the manual to prevent personal injuries and machine damage.

Do not operate the machine by guesswork. Keep this manual at hand and refer to it whenever you are not sure of how to perform any of the procedures.

2.2 MOVING OF THE MACHINE

As far as the moving of the machine is concerned, please follow the **carrying** and **cleaning** method to keep your machine in the best working condition. You can choose any one method as following to move your machine:

A. CARRYING:

1. Use crane to place

Carry the machine to its location by using a crane and a wire rope sling that can fully withstand the weight of the machine(your machine weight about 640 Kg). Apply the wire rope sling to the lifting hooks at the rear of the front vise slide and to the rear end of the machine. Slowly lift the machine while taking care so that the machine is not shocked and that the wire rope does not interfere with the saw-head.

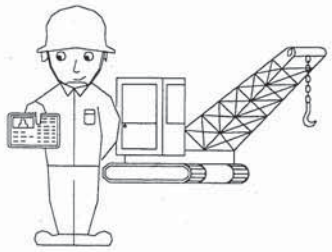

✓• A qualification license to crane is necessary to move your machine.

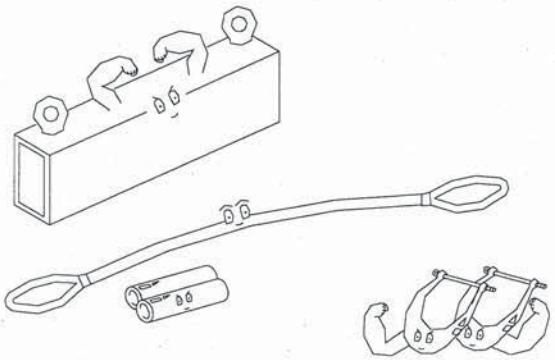

✓• Use proper tools and wire rope slings to move your machine.

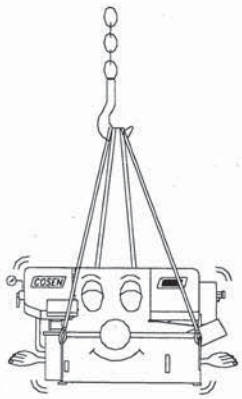

✓• Apply the wire rope sling to the lifting hole at the rear of the front vise slide and the rear end of the machine. Keep the machine balance while moving the machine up.

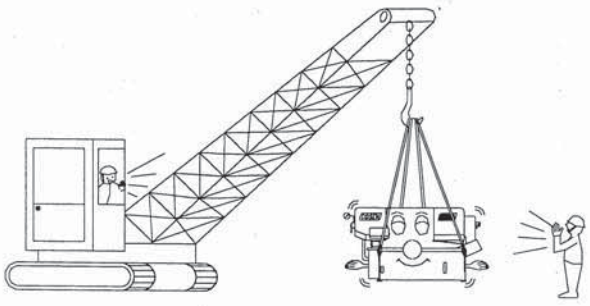

✓• When working together with more two people, take care of each other to avoid dangerous moving.

2. Use forklift to place

Most of the users choose this method to move their machines.

✓• A qualification license to forklift is necessary to move your machine.

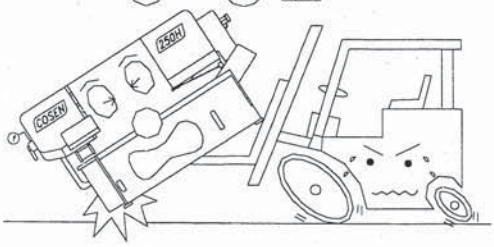

✓• Use adaptable capability of forklift.

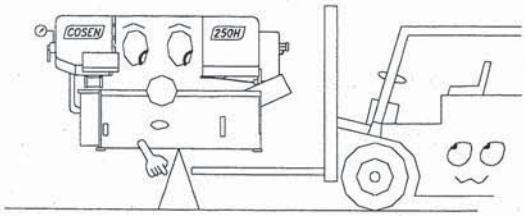

✓• Keep balance of your machine.

3. Use rolling cylinder to place

You can use this method to move your machine when it is in the small machine shop .

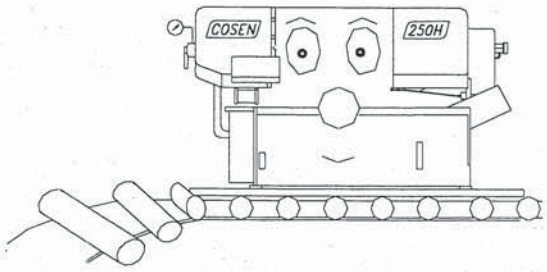

✓• Use adaptable compressive strength of the wooden stand material.

✓• Use adaptable compressive strength of the rolling cylinder material.

B. CLEANING

After the machine has been spotted on the designated position, remove the rust-preventive grease with wiping cloth dampened with cleaning oil or kerosene. Apply machine oil to the machine surfaces that are susceptible to rusting.

☛ Do not remove the rust-preventive grease with a scraper or the like. Do not wipe the painted surfaces with solvent.

2.3 INSTALLATION OF THE MACHINE

2.3.1 Safety Precautions

Surroundings

- ✓ • Keep the machine away from the sun light.
- ✓ • Keep the temperature of the surroundings at 5~40°.
- ✓ • Keep the humidity of the surrondings at 30%-95″ (without condensation) to avoid dew on electric installation and machine.
- ✓ • Keep enough space between your machine and others machines to avoid the vibration interfering to each other.
- ✓ • Do not install your machine on an uneven ground foundation.
- ✓ • Keep your machine away from the water or heavy dust.

Power Supply

- ✓ • Supply voltage: 90 %- 110 % of nominal supply voltage.
- ✓ • Source frequency: 99 %- 101 % of nominal frequency.
- ✓ • Do not use the same power supply together with electric spark machining, electric welder. to avoid unstable voltage.
- ✓• The independent and direct power supply is a suggestion.
- ✓• Use correct capacity of electric power supply.
  ☛Limit the supply voltage variations to within ± 10%
- ✓• Earth the machine properly with an independent wire.

2.3.2 Initial Inspection

1. Check the model of your machine and the instruction manual.
2. Check the equipment or tools being furnished.
3. Check the outlook of your machine to make sure that your machine was shipped or transportation in a good condition.

2.3.3 Space Required

Keep enough spaces for material loading and unloading, operation, inspection and maintenance of the machine as the following figures,

Required Floor Space (without Roller Table)

unit: mm

NO.	NAME
1	Machine Body
2	Electrical Control Box
3	Hydraulic Unit

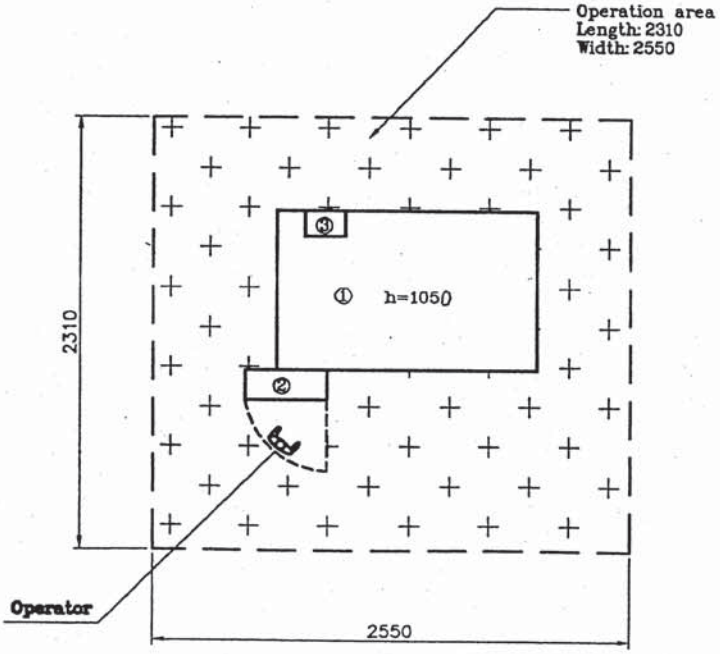

Required Floor Space (with Roller Table)

unit: mm

NO.	NAME
1	Machine Body
2	Electrical Control Box
3	Hydraulic Unit
4	Roller Table

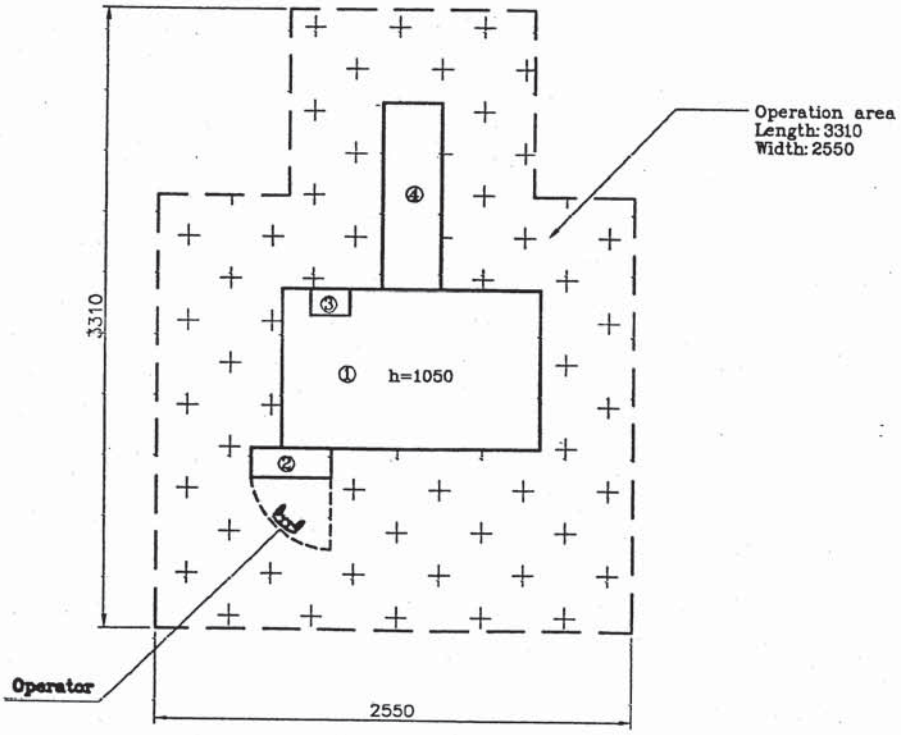

2.3.4 Unpacking

- After the machine has been properly positioned, remove the shipping bracket carefully by screw driver and proper tools to avoid being hurt by the snails.
- Unpack your machine carefully. Do not damage the machine surface paint.

☛ Be sure to retain this bracket so that it can be used again in the event that your machine must be relocated.

2.3.5 Equipment Furnished

Your machine has a set of tools to do the maintenance as following,

1. Tool box	1 pc
2. Grease gun	1 pc
3. Screw drive(+, -)	2 pcs
4. Open end spanner	3 pcs
5. Hexagon wrench	1 set
6. Chip filings spade (with manual type only)	1 pcs
7. Operation & parts book	1 pcs

2.3.6 Installation Procedures

Your machine is more easy installing than other brand's type. Following this manual, you can do yourself step by step. The major machine function for setting up as following: fixing the machine on the floor, machine leveling, installation of feed roller, cutting fluid supply, hydraulic oil supply, electrical connection

○ Anchoring the machine on the ground foundation

1. For best performance, the band saw has to be anchored on a solid foundation. The ground foundatin must have a carrying capacity of approximately 2.0 ton (including: material weight).

2. It is recommended that the shock absorption pads be installed when levelling.

3. If a crane is used to lift the machine, ensure that the lifting cable is the properly attached to the machine.
   ☛ Be careful to protect the machine from impact or shock during this procedure. Machine weight: 540 kg(1188lbs).

○ Machine leveling

- Place spirit levels on the vise slide plates and the work feed table, and adjust the left-and-right and fore-and-aft level of the machine with leveling bolts.

- The fore-and-aft level should be adjusted rightly. The level of the rear for the machine is approximately 25 mm(1 in.) higher than the level of the front end. This will allow the proper return of the cutting fluid for working. The illustration as show as Following:

☛ Be sure to ascertain that all leveling bolts evenly support the weight of the machine.

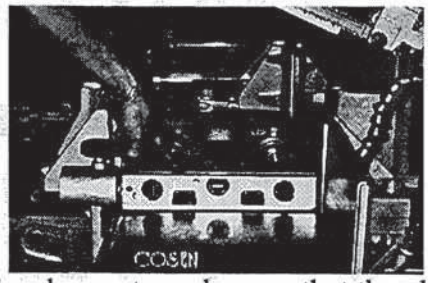

* Use a level gage to make sure that the platform is flat and even at all angle.

○Installation of feed roller

If you plan to cut long workplaces, please arrange the roller table and roller stand behind the machine.

☛The roller table and roller stand should be level with the machine itself.

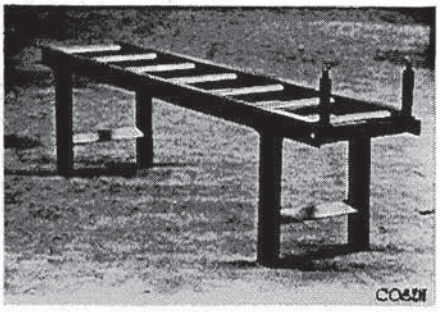

○Cutting fluid supply

Use proper cutting fluid mixture. If Shell Dromus BS or Shell Lubricool Yellow Cutting Fluid is used, the ratio of cutting fluid to water should be approximately 1:15~1:20. Check the sight gauge to ascertain the fluid level in the tank. Tank capacity: 25.2 liters(6.6US gal , 5.5 British gal .)

○Hydraulic oil supply

Open the filler cap. Please fill the hydraulic oil tank with the hydraulic oil furnished with the machine. Check the sight gauge to ascertain the oil level in the tank.

○Electrical Connections (Power Requirement)

- Open the electrical enclosure door and connect the power supply cable to the circuit breaker(N.F.B.) terminals that are indicated by the arrow in illustration as following:
- Be sure to connect the ground cable to the ground terminal. The power supply to your machine should agree with the wiring voltage that is indicated on the label attached to the electrical enclosure.
- If the power line voltage is changed, change the wiring of the transformer and motors, and reset or replace the thermal relays as shown as following:

☛ 220V- 50Hz
380V- 50Hz
415V- 50Hz
440V- 50Hz

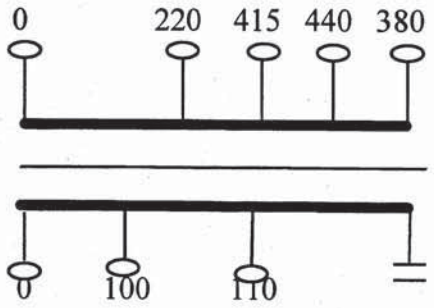

○Installing Fire Control Device

Install a fire extinguisher or other fire control device in the shop.

2.4 WORKING CONDITIONS

For safety in operating working, we recommend you as following:

- Your should work in light clearly for working site.
- To avoid operator falling down, please keep dryness on the floor.
- To avoid the dust that comes from another machine making affect electrical control facilities.
- Except operator, please do not let people near your machine for safety.

Section 3

OPERATION INSTRUCTIONS

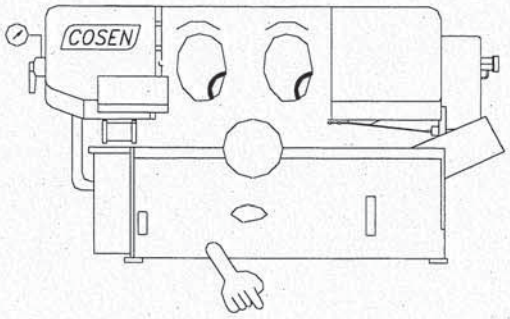

SECTION 3

OPERATING INSTRUCTIONS

3.1 SAFETY PRECAUTIONS AND PROHIBITED MEASURES

For your safety, please read and follow the guidelines below:

- ✓ • The machine can only be used for its designated purpose.
- ✓ • Do not wear gloves, neckties, jewelry, long hair, or loose clothing.
- ✓ • Put the industrial eye-protection goggles on before operating the machine.
- ✓ • Check blade tension and adjust blade guides before starting the machine.
- ✓ • Always clamp stock firmly in place before cutting and use auxiliary support for long material.
- ✓ • Do not remove jammed or cut-off pieces until blade has stopped.
- ✓ • Keep fingers out of path of blade.
- ✓ • Guards should be in place and used at all times.
- ✓ • Disconnect machine from power source before making repairs or adjustments.
- ✓ • Put the Protective gloves on before changing the saw blade.
- ✓ • Please do not move your eyes from the machine while operating it.
- ✓ • Please use warning signs to keep people at a safe distance from the machine.

You can operate your machine easily and comfortably if you follow the instruction in this manual to operate your machine. We also list possible situations to avoid hazards in the danger zone.

3.2 PREPARATION FOR USE

The selection of an appropriate saw blade and cutting method is important in cutting the work safely and efficiently. Select an appropriate saw blade and cutting method by fully considering the work to be cut and the requirements of your job (such as cutting accuracy, cutting speed, time, and safety).

Cutting method

If you choose **dry cutting** and low speed of saw blade, the chips may accumulate in machine parts and may cause the operation or insulation failure of the machine. In most circumstances, we suggest you choose **wet cutting** to avoid machine damage. For a better understanding on cutting, please refer to section 7 - "Band Saw Cutting - a Practical Guide."

Cutting unknown materials

Before cutting an unknown material, consult the supplier of the material, burn a small amount of chips from the material in a safe place, or follow any other procedure to check to see if the material is flammable or not.

☛**Never move your eyes away from the machine during the cutting operation.**

Cutting fluids

There are two kinds of cutting fluid, namely **oil-based cutting fluids** and **water soluble cutting fluids**. The oil-based cutting fluid is more expensive than the water soluble cutting fluid. We suggest you use the **water-soluble cutting fluids**. The following table lists both the advantages and disadvantages for using water-soluble cutting fluids.

ADVANTAGE AND DISADVANTAGE OF THE WATER-SOLUBLE CUTTING FLUIDS

Advantage	Disadvantage
Have high cooling effect	Remove paint
Not flammable	Lose rust protection effect when deteriorated
Economical	Foam
Does not require cleaning of cut products (especially when soluble)	Putrefy
	Decline in performance, depending on quantity of water used for dilution

If Shell Dromus BS or Shell Lubricool Yellow Cutting Fluid is used, the ratio of cutting fluid to water should be approximately **1:15~1:20**. Check the sight gauge to ascertain the fluid level in the tank. Tank capacity: 25.2 liters (6.6 US gal., 5.5 British gal.)

☛ **Never work with pure water only.**

3.3 CONTROLS DESCRIPTION AND OPERATION INSTRUCTION

3.3.1 Control Panel

The 11 functions of the control gears on the panel are illustrated and described below.

1. CUTTING PIECE counter
2. POWER indicator lamp
3. AUTO/MANUAL select switch
4. MOTION DETECTOR ON/OFF safety switch
5. MANUAL FORWARD/BACKWARD STOCK FEED select switch
6. BLADE DRIVE ON/OFF button (with light)
7. MACHINE ON buttons
8. EMERGENCY STOP button
9. SAW BOW UP MOVEMENT button
10. SAW BOW DOWN MOVEMENT button
11. COOLANT SUPPLY select switch (on/off)
12. DOWNFEED RATE CONTROL dial

Control Panel

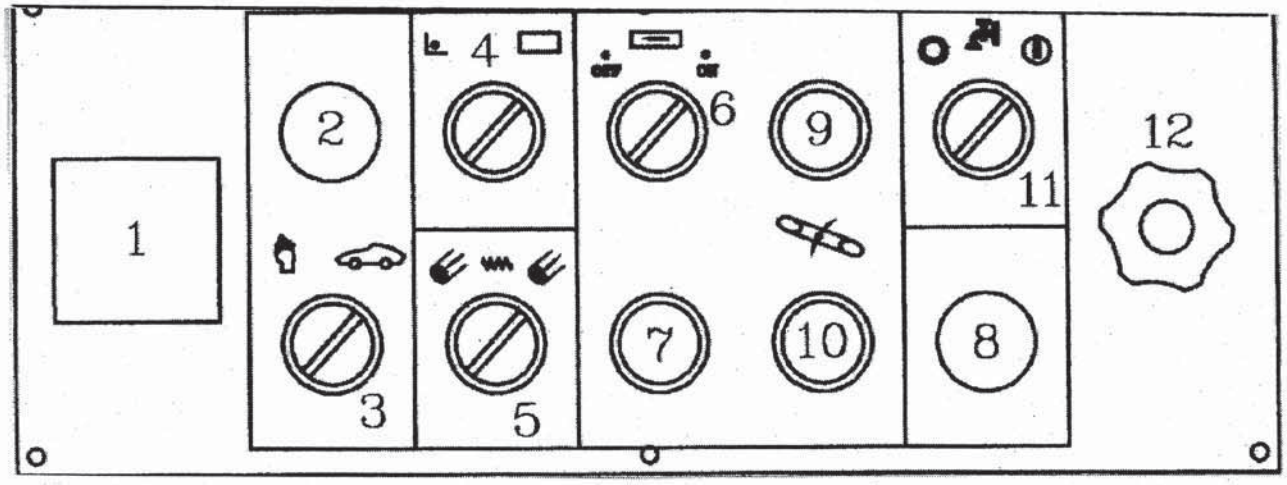

1. CUTTING PIECE counter

This counter is used to preset the number of cuts required in the automatic mode. When the counter reaches the preset number, the machine is turned off automatically.

COUNT readout (white color digital number):

- Automatically counts and indicates the number of pieces already cut in the automatic mode. The count range is 1 to 99999.
- Press down "▬" type button at left side to reset.

NOTE: Counter and the reset button functions in both "manual" and "automatic" mode, and only with the lid for preset interface closed.
The red dial in the reset button locks and unlocks the reset button.
Counter functions by counting the number of times saw bow reaches the lower limit switch. When the counter reaches the preset value, the machine will shut off. In order to restart, one must reset the count readout.

PRESET readout(yellow color digital number):

- Indicates the number of pieces to be cut in the automatic mode. The setup range is 1 to 99999.
- You can turn/rotate the number dial for count changing anytime during the cutting operation
- Please close the lid after the target cuts number has been set.

2. POWER indicator lamp

Indicates that the power of band saw machine is turned on. Light comes on when you turn on machine circuit breaker switch on the electrical enclosure for machine. This lamp indicates preparation for start-up.

3. AUTO/MANUAL select switch

Use to select automatic or manual mode of operation. When the switch is turned to MANUAL(✋), you can operate each function individually. When the switch is turned to AUTO(), the machine automatically operates according to the preset cutting data.

☛ When the machine is first started in the MANUAL mode and then switched to the AUTO mode, the first cut is not counted, but the machine automatically operates according to the preset cutting data. This function can be used for the machine to automatically cut the work after it trims the end of the work.

☛ In the automatic mode, when the switch is turned to MANUAL during cutting, the machine stops on completion of the cut, and when the switch is turned to MANUAL during the operation other than cutting, the machine stops immediately.

4. MOTION DETECTOR ON/OFF safety switch

Motion detector can automatically detect and shut down the machine for improper blade tension or blade breakage. The safety switch must be turned on before operating the machine. When changing the blade, the power should be off and safety switch should be turned on to prevent accidental start.

NOTE: Saw blade must be tensioned to operate machine. Please see Sec 4.3.3 for detail.
When safety switch is on, machine will not start:
- without saw blade mounted.
- should saw blade not be correctly tensioned.
- after blade breakage.

The machine can be operated in "OFF" position, however, the motion detector then is disengaged. We recommend you keep the safety switch "ON" at all times.

5. MANUAL FORWARD/BACKWARD STOCK FEED select switch

Select feeding "forward," "off" or "backward" by turning the dial to left, center, or right position.

6. BLADE DRIVE ON/OFF button (with light)

ON mode(green color button):

- Press to start the saw blade motor.
- The saw blade begins to drive only when the clamp has secured the workpiece.

OFF mode(red color button):

- Press to stop the saw blade motor.

7. MACHINE ON buttons

ON mode(green color button):

- Press to enable the machine for operation.
- This button is disabled when the EMERGENCY STOP (4) is pressed.

8. EMERGENCY STOP button

Press to stop the machine in an emergency. When you press it, it brings the machine to a total stop. The button locks when pressed and must be turned to unlocked it.

9. SAW BOW UP MOVEMENT button

In manual and automatic mode, saw bow will raise to the highest position when this button is depressed.

10. SAW BOW DOWN MOVEMENT button

In manual mode, this control will enable the saw bow to move downward till reaching the lowest position as long as it's depressed. In automatic mode, this button does not interrupt the pre-programmed actions.

11. COOLANT SUPPLY select switch

This select switch is used to control the coolant supplying to the cutting area.

"I" mode:

- If the select switch is turned to this mode, the coolant will be supplied to the cutting area.

"O" mode:

- If the select switch is turned to this mode, the coolant will not be supplied.

ATTENTION: The lower part of the base serves as coolant tank.
The cutting fluid is supplied to the saw guides and should be mixed in accordance with the recommendations of the supplier. It should not contain too much grease to avoid slipping of the saw blade on the wheel.
Never work with pure water only.
To clean the tank, please take off the discharge table and steel sheet cover.

12. DOWNFEED RATE CONTROL dial

This control dial is used to control the downfeed rate of the saw blade during the cutting period. Turn the dial counterclockwise to increase the down feed rate and decrease the cutting time; turn the dial clockwise to decrease the downfeed rate and increase the cutting time.

3.3.2 Featured and Optional Devices

The COSEN AH-1010JAY offers fully automatic cutting cycle, controlled by hydraulic, electric, and mechanic devices. It is well suited for small and mid-size machine shop's metal-cutting needs. Due to the compact design, the saws will take up less space on your shop floor. Large cutting capacity, easy operation, and high performance at a very affordable price make them the perfect choice among the band saw machines in their size class.

The saw head position control is accomplished hydraulically. When equipped with a non-step variable speed control device, the saw blade speed can be adjusted while the saw is running. It will also allow the operator to "fine-tune" the blade speed easily and quickly to an optimized cutting speed for different materials. For maximum operator safety and convenience, all machine controls are located at a single station on top of a cabinet panel. The chip pan on the machine will hold large amount of metal chips which is very handy for high production cutting operation. The Cutting Length Preset Device offers precise length setting and easy adjustment for mass production. From head to toe, AH-1010JAY is designed to have all the system you will find on a fully automatic band saw machine:

Automatic Shut-off Device for blade breakage

As described in Sec 3.3.1: (4) MOTION DETECTOR ON/OFF safety switch, this device will shut off all motors should the blade malfunctions.

Coolant System

This system, if used properly, will prevent the running blade from overheating. This coolant tank has max. capacity of 25.2 liter (6.55 US. gal., 5.54 British gal.) For details regarding operation, please refer to Sec 3.3.1: (11) COOLANT SUPPLY select switch.

Motorized Roller Feeding System

Roller feeding allows precision positioning. At the end of cut, the stock automatically backs off the blade slightly to allow the blade at its lowest position to clear the work on its return to the starting position. This feature prevents tooth deformity by eliminating the undesirable abrasion and crimping.

Out-of-stock Switch

This switch is located in the roller feeding system shaped similarly to other rollers. However, it is a part of the mechanism that detects if stock is properly clamped. If there is no stock or not properly clamped, the machine will not run.

Preset Cut-piece Counter

Please refer to Sec 3.3.1 "Control Panel"

Precise Length Setting for Cut-to-measure Piece

With the *cutting length preset device* and *preset length stopper*, your AH1010JAY is able to perform automatic cutting as many times as you may need. After each cut, the saw frame raises up, and the material stock is fed forward automatically by the roller to the preset length stopper. A signal is transferred in order to start next cut. For installation procedures, please refer to Sec 3.3.3 "How to Properly Install/Adjust for Smooth Cutting."

Safety Switch

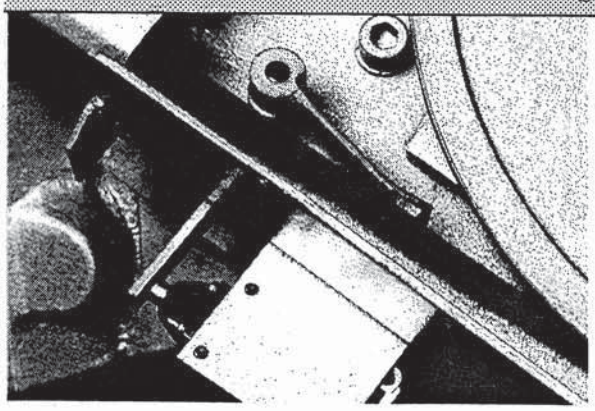

This motion senser is located on the bottom of the drive wheel. It works by applying tension to the blade. Once there is improper tension on the blade or blade breakage, this switch will send a signal to turn off the machine. For details, please refer to 3.3.1 "Control Panel" - (4) MOTION DETECTOR ON/OFF safety switch.

Vertical Clamping Device (Standard)

This device is composed of a nesting fixture (3-15), a pressing bar (3-16), and two screws (3-17,18). It can be fixed onto the moving vise and adjusted to hold front end of the stock down. For installation, please see the parts diagram for Bed in Section 9. The number follows each name corresponds with the parts diagram.

Vertical Clamping Roller (Optional)

This useful device further strengthens the vertical clamping capability by holding down the work from rear end of the bed. First replace the end cover of the roller feed vise motor with one that has an extended shaft. Then install the handle onto the shaft, and the horizontal roller onto the handle.

Clamping Device for Short Piece (Optional)

When cutting stock shorter than the distance from the out of stock switch to the blade, you can use this clamping device **under manual mode only** to save extra material. There are four components to this device: a main clamp, a vice-clamp, and two screws (M16). The short work piece is set in-between the two clamps and tightened by the two screws. Adjust the desired cutting length before tightening the screws. It's easy to use and cost effective.

NOTE: Max. Clamping Capacity: 165 mm diameter

Non Step Variable Speed Device (Optional)

This device enables speed adjustment from manual speed changing to automatic control, providing an infinite number of speed suitable for your cutting needs. By turning the adjusting knob clockwise, the blade speed increases to a maximum of 88 mpm (288 fpm). By turning the adjusting knob counter-clockwise, the blade speed decreases to a minimum of 27 mpm (89 fpm). The rotating speed can be displayed digitally by installing a *digital tachometer* (available upon request).

3.3.3 How to Properly Install/Adjust for Smooth Cutting

WARNING

1. ALWAYS DISCONNECT POWER CORD WHEN MAKING ANY ADJUSTMENTS.
2. WHEN READY TO CUT, MAKE SURE "SWITCH" IS **OFF** BEFORE PLUGGING IN "POWER CORD".
3. DO **NOT** CONNECT POWER CORD TO POWER SOURCE UNTIL THE FOLLOWING INSTRUCTIONS ARE CLEARLY UNDERSTOOD .

ADJUSTMENTS BY YOU:

Blade Speed Adjustment

BLADE SPEED SELECTION - Blade speed should be determined by the material to be cut. The following chart is for general reference only.

Material	Speed mpm fpm		Pulley Groove Used	
	50 Hz	60 Hz	Motor Pulley	Saw Pulley
High speed alloy, stainless and heavy cross section material	24 79	29 95	smallest	large
Tool, Stainless Steel, Alloy Steel and Bearing Bronze	38 125	46 151	small	medium
Case Iron, Mild Steel, Hard Brass and Bronze	53 174	65 213	medium	small
Plastic, Copper, Soft Brass, Aluminum and other Light Materials	81 266	98 321	large	smallest

Due to manufacturing processes, such as certain types of cast iron pipe or materials containing certain types of welding, some materials can not be cut on this machine.

NOTE A GENERAL RULE TO FOLLOW IS, "IF THE MATERIAL CAN BE CUT WITH A FILE, IT CAN BE CUT ON THIS BAND SAW."

SPEED ADJUSTMENT

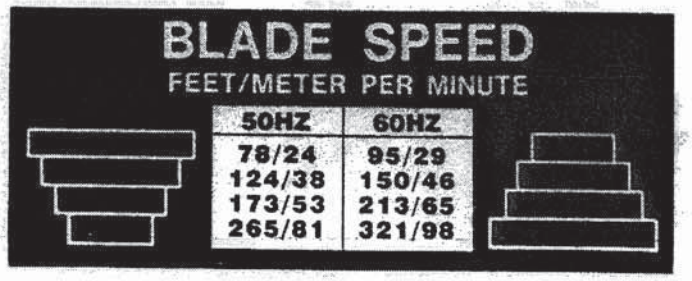

The general procedures of speed swap are shown in the following steps:

1. Remove the pulley cover.
2. Loosen the lock handle under the motor. (Shown in Fig. 1)
3. Position belt in proper groove according to the speed selection chart attached on the pulley cover. (See above photo)
4. Apply tension to belt and tighten lock handle.

NOTE THE PROPER TENSION IS, 1/2 INCH DEFLECTION OF BELT WHEN APPLYING MODERATE PRESSURE ON THE BELT BETWEEN THE PULLEYS.

5. Replace pulley cover.

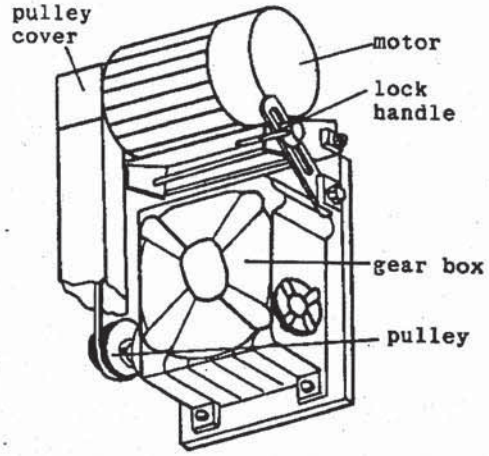

Fig. 1 Speed Swap Configuration

Blade Tension Adjustment

1. Turn the handle lever of the blade tension device CLOCKWISE to TIGHTEN the blade and then the blade tension is increased.
2. Turn the handle lever of the blade tension device COUNTERCLOCKWISE to SLACKEN the blade and then the blade tension is decreased.

3. Blade tension should be adjusted so that the blade will not slip on the bandwheels during the cutting period. Do not apply excessive tension to the blade to prevent breaking.

NOTE: As you turn the saw blade tension handle clockwise until bottom of handle meets the stopper, line up the two grooves. (This level of tension is factory adjusted.)

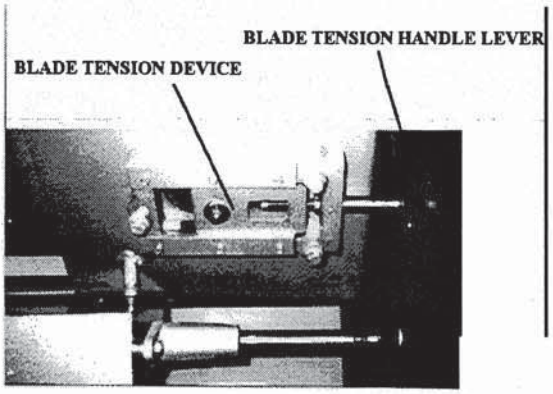

Stock Clamping and Cutting Length Preset Device

1. Turn on the machine, and operate under "Manual Mode."
2. Properly load the work piece. (Please see Sec 3.5 "How to Load the Work Piece")
3. Clamp the material with the hand wheel, and raise the saw bow until it reaches the highest position.
4. Jog the stock to desired cutting length with control (5) and or vise motor for micro adjustments.
5. Then lower the saw bow carefully to the position that the clearance between the saw blade teeth edge and the material top point is about 5 mm.
6. Turn OFF the machine as well as power.
7. Unpack the *depth bars (3-34)*. (Please see Parts Diagram 3: Bed) Insert them in the holes on the front and rear sides of the bed, slightly below the *guiding arms*. Push in bars until they are flush with the rear side of machine bed, fasten setscrews at the rear end.
8. Assembly the *right adapter(3-35)* and *left adapter (3-39)* with one fastening bolt each.
9. Then install the *cross slide (3-40)* and the *preset length stopper* (factory assembled) accordingly.
10. Now push *preset length stopper* onto the material along the bars, the pin of the device should touch the material at its upper utmost right hand side to ensure that the sawn off piece can fall down freely. Also be sure that all clamping wheels and levers of the stop mechanism are clamped tightly.
11. The *guide arms* or guides must never touch the stock but should be set as close as possible to the stock to be sawn. Be sure that the *guide arms* are clamped tightly to the *dovetail guide* with the help of the clamping handle.
12. The upper end limit switch can be adjusted in accordance of stock's height. The adjustment of this switch should guarantee that the up-movement of the saw bow is stopped just above the material.

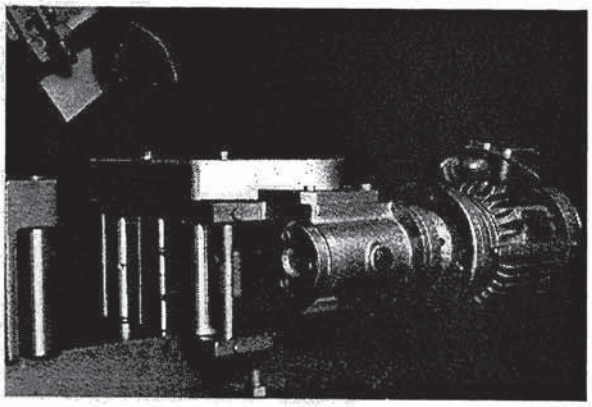

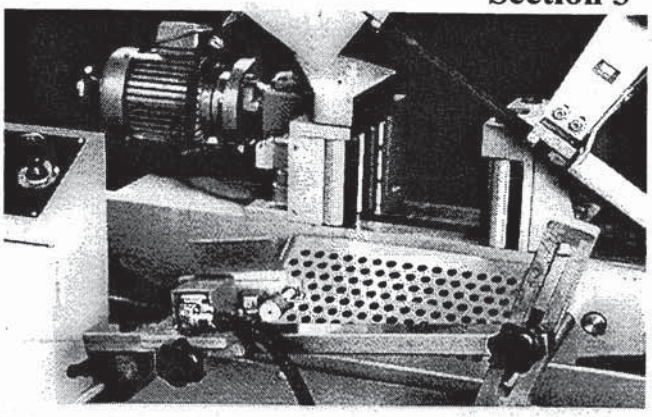

Fig. Stock Clamping Device and Cutting Length Preset Device

Cutting Feed Adjustment

The *Flow Control Valve* of the hydraulic cylinder can be adjusted to obtain the correct cutting feed rate for any desired feed pressure while forcing the blade downward into the material.

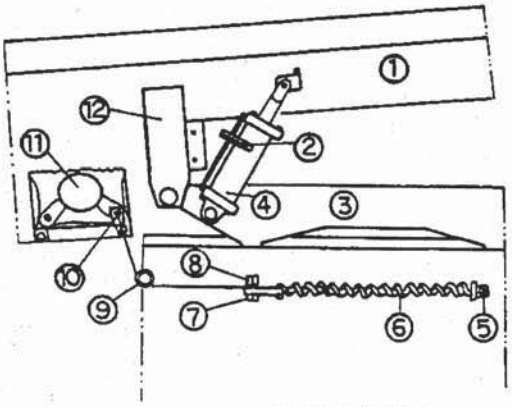

1. Saw Bow
2. By-Pass Valve
3. Bed
4. Hydraulic Cylinder
5. Bracket
6. Feed Tension Spring
7. Lock Nut
8. Adjustment Screw
9. Wire Rope Guide Wheel
10. Lock Screw
11. Gear Box
12. Screw Bow Bracket

Fig. 3 Cutting Feed Adjustment Mechanism
(Tension Spring Mechanism isn't used on Automatic Models)

NOTE Rate of Cutting Feed

- Proper rate of cutting feed is important. Excessive pressure can break the blade or stall the saw. On the contrary, insufficient pressure rapidly dulls the blade. The hydraulic cylinder regulates the rate at which the blade is lowered into the material being cut. By adjusting the "Flow Control Valve," you have an infinite choice for rate of cutting feed.

- If the workpiece thickness is smaller than 2 mm, please turn the knob of the flow control valve to 1-2; if the workpiece thickness is bigger than 3 mm, set the knob to 3-4.
- While settling the cutting material, the sawhead can be held at the middle position of the whole rising distance by turning the flow control valve to the zero position.

CAUTION :

If the sawhead is forced downward by external force, the hydraulic cylinder will be damaged. By-Pass Valve has been properly adjusted in factory, please DO NOT reset it.

PRESET ADJUSTMENTS: (Do not adjust unless necessary)

Leveling of Saw Blade and Bed Horizontal Line

1. Place a level on the bed (No. 4 in Fig) to obtain the leveling, as shown in Figure below.
2. Loosen the lock nut (No. 3) and lower down the saw bow, then place the level on the top of saw blade (Fig. A) to obtain leveling of the bed horizontal line by adjusting the screw (No. 2 in Fig).
3. Tighten the lock nut when leveling is obtained.

NOTE If the saw blade top line is not leveled with the bed horizontal line, the workpiece can not be fully cut through.

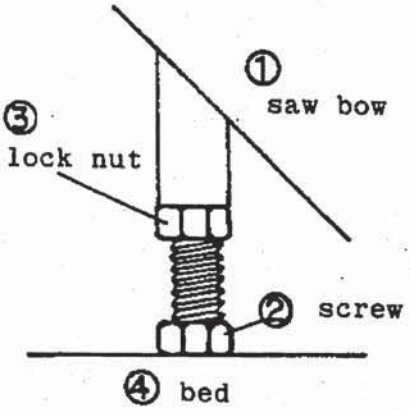

Fig. Leveling of Saw Blade and Bed Horizontal Line

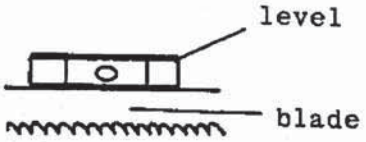

Fig. A Saw Blade Leveling

The saw bow should stop simultaneously or slightly before the screw in the above figure hits the bed. This automatic stop is activated by the lower limit switch. These two stopping mechanism are both pre-adjusted. Please do not re-adjust unless necessary.

Limit Switches and Automatic Shut-off:

Limit Switches and Automatic Shut-off:

In **manual mode**, the motor shuts off immediately after the blade has cut through the material. In **auto mode**, it shuts off when the last cut is executed. The shut off is activated by depressing the lower limit switch just before the head comes to rest to a horizontal stop. The upper limit switch also has the same function, however it is designed to be adjusted easily to save downfeed air time. If you are encountering incomplete cut-off of the stock, it may be the lower limit switch has moved due to constant use. You may adjust the height of the stopper (beneath lower limit switch) for minor

adjustment or relocate the limit switch for major adjustment.

Blade Guides and Cutting Precision

This segment will be discussed in terms of problems may be encountered and recommendations for correcting them.

1. Vibration on Saw Bow
   A. Cause: Dull blade or stripped blade
      Remedy: Replace a new blade
   B. Cause: Too large clearance between saw blade and thrust roller (Fig 11-1-2)
      Remedy: a. Loosen the two screws (Fig 11-2-2)
      b. Move guide seat (Fig 11-2-5) downward to adjust the clearance of .03 to .05 mm between thrust roller (fig 11-1-2) and saw blade
      c. Re-fasten the two screws (Fig 11-2-2)

2. An improper slant downward Y axis (Fig 11) of the cut-off work
   A. Cause: Improper blade tension
      Remedy: Consult adjustment for blade tension (p. 4-9)
   B. Cause: Incorrect Alignment between rollers (outer and inner) and saw blade (Fig 11-3, left)
      Remedy: a. Loosen the tungsten carbide blade guide (Fig 11-1-4)
      b. Loosen locking screws (Fig 11-4) with hex wrench.
      c. Adjust eccentric bushing (Fig 11-4) with a spanner to make saw blade 90° against bed surface
      After finishing the adjustment, tighten the locking screws (Fig 11-4), and make sure the face of tungsten carbide blade guides completely contacts the face of the saw blade (Fig 11-1-4)

   CAUTION: The adjusting screw (Fig 11-1-5) is pre-fixed in factory. Please do not try to adjust it unless the machine is seriously impacted by accident and has lost its accuracy.
   NOTE: After finishing all the adjustment, be sure to double check the saw blade not in twisted condition.

3. An improper tilt inward or toward X axis (Fig 11) of the cut-off work
   A. Cause: Incorrect alignment between fixed vise jaw and saw blade.
      Remedy: Adjust the vise 90° against saw blade.

4. The dovetail guide is factory accurately fixed. Please do not try to adjust it unless the machine is seriously impacted by an accident. If adjustment is necessary, please follow the procedures.
   Take off the arm guides
   Take off the gauge plate (which is adhered to dovetail with glue,) you will find there are 4 adjusting screws on each end of left and right side.
   Replace the arm guides
   Make fine adjustment on these adjusting screws.

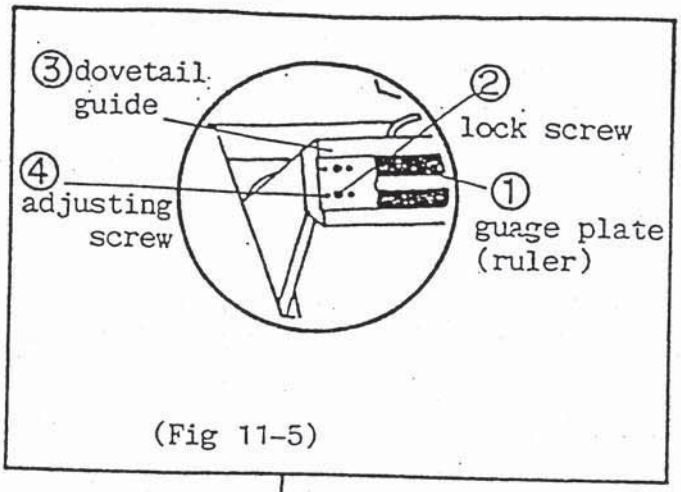

(Fig 11-5)

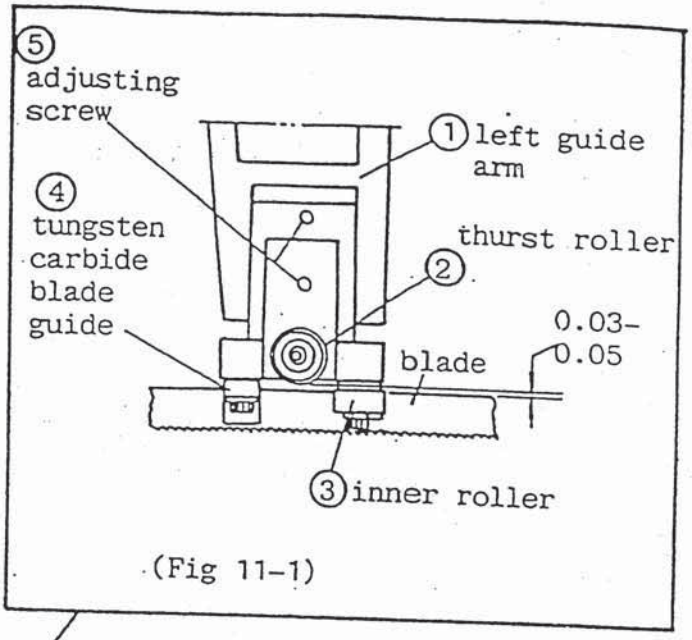

(Fig 11-1)

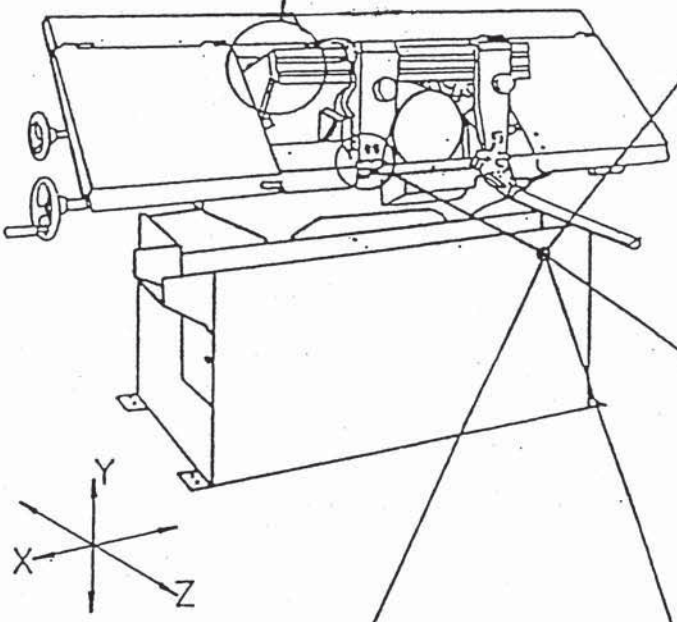

(Fig 11)

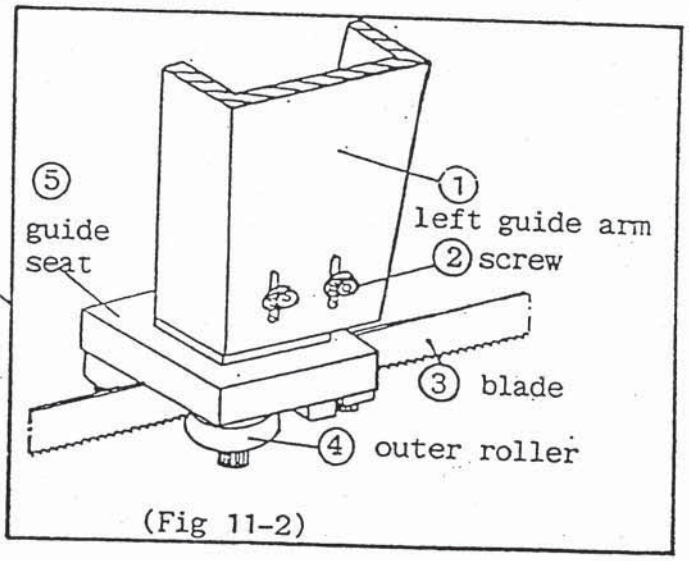

(Fig 11-2)

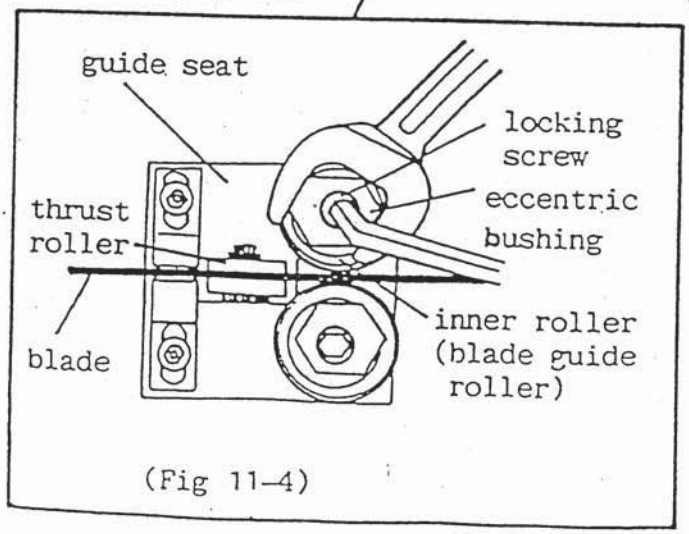

(Fig 11-4)

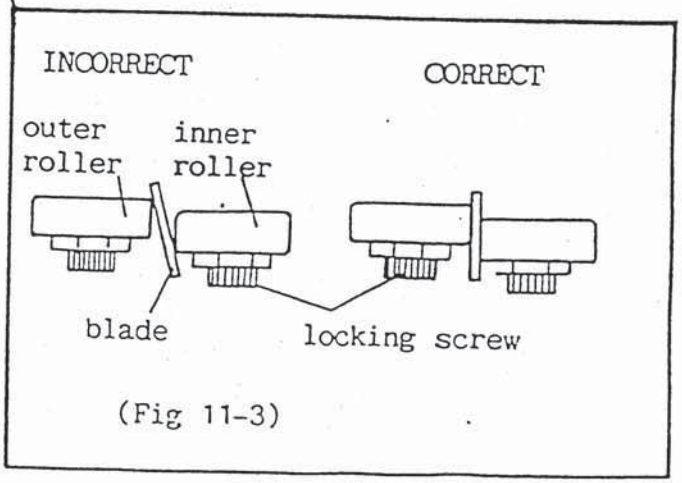

(Fig 11-3)

3.4 CHECKLIST BEFORE OPERATING

1. Remove the rust-prevention grease with cleaning oil or kerosene.
2. Make sure the teeth are pointing in the right direction.
3. Band should be properly seated on the wheels after applying the correct tension.
4. Make sure the blade is properly seated in the guide seat and allowing a 90° cut-off angle along Y axis and X axis.
5. Thrust rollers and back of blade should be slightly touching.
6. Select proper blade speed and downfeed rate.
7. Material should be securely held in vise.
8. Coolant should be filled and turned on, if required.
9. Keep machine lubricated.
10. Do not start cutting on a sharp edge.

WARNING

1. ALWAYS DISCONNECT POWER CORD WHEN MAKING ANY ADJUSTMENTS.
2. WHEN READY TO CUT, MAKE SURE "SWITCH" IS **OFF** BEFORE PLUGGING IN "POWER CORD".
3. DO **NOT** APPLY EXTRA FORCE TO THE SAWHEAD DURING CUTTING PERIOD.
4. DO **NOT** CONNECT POWER CORD TO POWER SOURCE UNTIL THE FOLLOWING INSTRUCTIONS ARE CLEARLY UNDERSTOOD .
5. WHEN CUTTING HORIZONTALLY, ALWAYS USE THE VISE TO HOLD THE WORKPIECE. DO **NOT** HOLD THE WORKPIECE BY HANDS.

3.5 HOW TO LOAD THE WORKPIECE

Properly place the workpiece on the work feed table using the following procedures:

1. Connect power and turn on the machine.
2. Depress the raise button [(9), see 3.3.1] to raise the saw bow until it is at the highest position.
3. Turn off the machine and power switch.
4. Fully open the roller vise manually with the handwheel.
5. Place the workpiece onto the work feed table carefully with the front of the workpiece exceeding the front roller for proper clamping. If your stock is long, we recommend you obtain roller tables to help load and feed the stock. Our roller tables are custom-made for your machine. Each is 1 meter (3.28 ft.) long. (Available upon request)

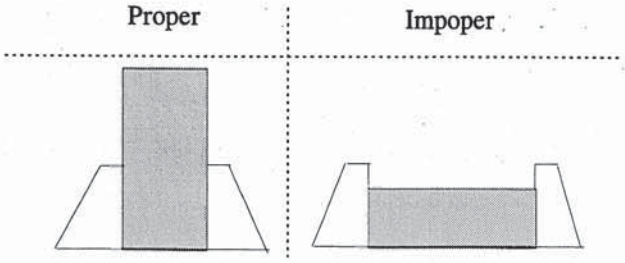

Determine the proper cutting position of the workpiece using the following procedures:

1. Clamp the material with the hand wheel, and raise the saw bow until it reaches the highest position.
2. Jog the stock to desired cutting length with control (5) or vise motor for micro adjustments.
3. Then lower the saw bow carefully to the position that the clearance between the saw blade teeth edge and the material top point is about 5 mm.
4. Turn OFF the machine as well as power to adjust anything manually.
5. Install the *cutting length preset device* for convenient length setting for cutting more than one piece.

Once you turn the machine back on, you are ready to perform cutting. For cutting, please follow the instructions stated in Sec 3.6

☛If the work cannot be securely clamped with the roller vises, use the *Vertical Clamping Roller* to clamp it securely. It is dangerous if the work is clamped loosely and forced out of the vises during cutting.

3.6 TEST RUN THE MACHINE

By following the procedures and operating properly, your machine will be performing excellently for the days to come.

3.6.1 Manual Mode

It might be necessary to use the machine for single cuts without automatic feeding. First of all, the selector switch (3) must be set to "manual" position.

Stock Feeding: The stock can either be fed against the *material stop* with manual stock feed selector (6) or adjusted to length by manually rotate the handwheel mounted coaxial with the feed motor.

Saw Bow Movement: In manual mode, saw bow stays down after each cut. Lifting or down feed of saw bow must be activated by manually depress the push button respectively (9) and (10). When saw bow down feeds, the rate is controlled by the *Flow Control Valve* on the right guide arm which can be easily adjusted from the *Downfeed Rate Control Dial (12)* on the control panel. If one needs to keep saw bow at lifting position, simply let go of saw bow movement controls. It will stay right where you leave it.

3.6.2 Automatic Mode

We recommend to start automatic cycle with 4 or 5 equal cuts. Set select switch (3) to automatic mode. The end limit switch on the *preset length stopper* triggers the down movement of the saw bow. After the cut has been completed, the lower end limit switch will start the lifting of the saw bow. As it reached the upper end limit switch, feed rollers will start the feeding of the stock against the switch of the *preset length stopper*. At the moment the stock touches the end limit switch, the feeding motion will stop and the down movement of the saw bow begins. This cycle will be repeated after each cut.

NOTE: Proper feed rate of saw bow must be selected from the downfeed rate control dial before operation.
During the automatic cycle, the blade runs continuously.

3.6.3 Machinery Performance Test:

You can turn on the power to test run the machine when you finish setting up. Keep the checklist (Sec. 3.4) in mind while follow procedures below:

1. Connect electricity by turning the power switch on (located on the electrical cabinet.)
2. Now, Turn on the machine by depressing the machine "on" button .
3. Set select switch (3) to manual mode.
4. Ascend the saw head by depressing button (9) until it reaches the top limit switch.
5. Properly place the workpiece on the work feed table, make sure the vise is fully open.
6. Tighten the vise clamp by hand.
7. Jog the stock back and forth by utilizing the select switch (5) till your preferred cut-off length (meanwhile the saw bow must stay at the highest position.)
8. Descend the saw head carefully until the teeth of the blade is 1 mm above the stock.
9. Adjust the proper downfeed rate by turning the *Downfeed Rate Control Dial (12)*.

NOTE: Make sure the *Coolant Supply Select Switch* (11) has been turned on, and the cut-off pieces will be safely contained. If this is a BREAK-IN OPERATION (new saw blade), please reduce cutting speed by half, and lengthen cutting time by 2 to 3 times.

Manual Mode:

10. Turn the blade drive button (6) on.
11. Press saw bow downfeed button (10) to start cutting the stock.
12. When it finishes cutting, the machine will automatically shut off.

Auto Mode:

10. Turn off the machine, and the power switch in front of the electrical cabinet.
11. Install the *Cutting Length Preset Device*. (Please see Sec 3.3.3 for installation procedures.)
12. Adjust the *Cutting Piece Counter (1)* to preset number of pieces being cut. Also, make sure the *Cutting Piece Counter* has been reset. (Please refer to Sec 3.3.1 "Control Panel.")
13. Turn on the power switch, and turn on the machine (7).
14. Turn the blade drive button (6) on.
15. Press saw bow downfeed button (10) to start automatic cutting cycle.
16. The cycle will stop when the counter reaches the preset value. The machine shuts off automatically. However, the power will still be connected.

NOTE: To stop the machine after the current cut, change "Auto mode" to "Manual mode."
To stop the auto mode right away, you can raise the saw bow, stop the blade drive, turn the machine off, turn the power off, or press the emergency stop.
Once the auto cycle is stopped, it can be resumed unless the machine or the blade breaks or the counter has been reset.

Gauge Workpiece:

Item	Design value
⬋100 mm	Accuracy degree 0.2 mm
Length accuracy degree	+ 0.1~ 0.2 mm
Blade tension	1800 kg (1 inch saw blade)
Hydraulic pressure	21~ 23 kg/cm^2
Reducer gearing temperature	5^0~55^0C

☛ After completion of the day's work, be sure to lower the saw head to the lower limit position after removing the work piece.

3.6.4 Break-in Operation

When a new saw blade is used, be sure to first break in the blade before using it for actual, extended operation. Failure to break in the blade will result in less than optimum efficiency. To perform this break-in operation, the following instructions should be followed:

1. Reduce the blade speed to one-half of its normal setting.
2. Lengthen the time required for cutting 2-3 times that of normal.
3. The break-in operation can be considered sufficient if all the unusual noises or metallic sounds have been eliminated. For instance, to completely break in the blade, a minimum of five complete cuts of a 200 mm (7.9 in.) diameter workpiece will be required.
4. After completion of the break-in operation, return the blade speed and descending speed of the saw head to their normal settings.

3.7 HOW TO SELECT AND REPLACE THE SAW BLADE

Blade Selection

Please refer to Section 6: "Band Saw Cutting - A Practical Guide," there are lots of important information related to your cutting needs and your new blades and saws.

WARNING

1. ALWAYS DISCONNECT POWER CORD WHEN MAKING ANY ADJUSTMENTS.
2. WHEN READY TO CUT, MAKE SURE "SWITCH" IS **OFF** BEFORE PLUGGING IN "POWER CORD".
3. DO **NOT** CONNECT POWER CORD TO POWER SOURCE UNTIL THE FOLLOWING INSTRUCTIONS ARE CLEARLY UNDERSTOOD .

Unfolding saw blade:

When you decide to unfold saw blade for new one changing, you can follow method as illustrations show:

☛Please wear leather gloves and protective goggles in those procedures.

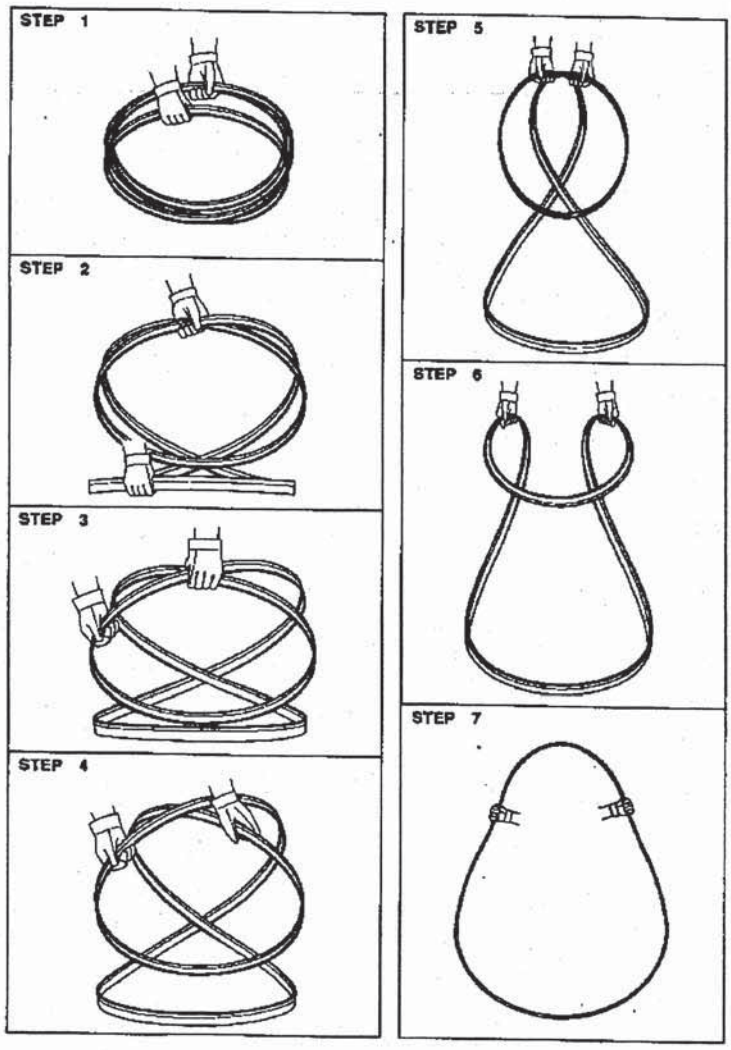

Installing saw blade:

1. Turn on power to move saw head upward until the wheel covers can freely open and close.
2. Please disconnect power by depressing button (7) on the control panel to turn the machine off and disconnect power from the machine.
3. Remove blade guards.
4. Open the wheel covers fully and make sure they remain in a steady position.
5. Loosen the tension on the blade by turning the saw blade tension handle to move the driven wheel closer to the drive wheel.
6. Push down the saw blade from where it inserts the rollers. (**Caution**: make sure no one will accidentally put power back on the machine, then wear leather gloves to handle the blade.)
7. Loosen the wire brush lock lever, and lower the wire brush.
8. Clean the saw band guides before installing a new saw blade.

9. Install the saw blade on the drive and driven wheels with the cutting edge facing down.
10. Put the saw blade into the left-hand and right-hand saw blade inserts until the back of the blade is slightly touching the backup rollers (thrust rollers) in each saw blade insert.
11. Press the back of the saw blade against the flange of the drive wheel.
12. Press the back of the saw blade against the flange of the driven wheel, and turn the saw blade tension handle clockwise until bottom of handle meets the stopper, then line up the two grooves. (This level of tension is factory adjusted.)
13. Please gently close the wheel cover.
14. Reconnect the power to the machine, and turn the machine back on.
15. Press the blade drive "ON" button to start the saw blade running for a few seconds, then stop the blade by pressing blade drive "OFF."
16. Open the wheel cover and check to see that the saw blade is not off the drive and driven wheels and is correctly located in the blade guides. (see Sec 3.3.3 for adjustment procedures).
17. Check and adjust if the brush is allowing the brush tips running free through the bottom of the teeth.
18. Please close the wheel cover.
19. Your saw blade installation is complete.

Thank you for following the instructions. If there is any advice or comments, please send the "Return Envelop" on the back of this manual along with feedback form to us. Your suggestions will help us understand and meet your needs.

3.8 PROCEDURES TO STOP AN OPERATING PROCESS

Manual and Automatic Cutting Operation:

- To stop the cutting operation, please press the BLADE STOP button, MACHINE OFF button, EMERGENCY STOP, or POWER OFF switch on the electrical cabinet.
- The saw blade doesn't stop running when the BLADE UP button is pressed. You must press BLADE STOP afterwards. If this is not an emergency, we recommend you raise the blade first before you stop the blade to protect the blade from clogging inside the stock. If you press the MACHINE OFF button, both the saw blade and hydraulic pump motor will stop running.
- When an error occurs, the machine automatically stops, please refer to section 10 for troubleshooting.

Resuming Automatic Operation:

- When the above buttons (BLADE STOP button, MACHINE OFF button, EMERGENCY STOP, or POWER OFF switch) are pressed in the middle of a cutting operation, the pieces being cut will not be counted among the number of pieces already cut.
- The operation stopped by pressing any of the above buttons can be resumed by pressing the BLADE DRIVE button after the machine is turned back on. Unless the *Cutting Piece Counter* has been reset to zero, the stock not properly clamped, or an error occurs.
- When the AUTO/MANUAL select switch is turned to MANUAL while the machine is operating in the automatic mode, the machine keeps on cutting until it reaches the lower limit switch position.

CHECK LIST OF HAZARDS

CHECK TABLE OF EN292 LIST OF HAZARDS

The following table checks all the hazards listed on EN292 regulations. However, for those hazards that do not apply to our product, we put "Do not apply" on the hazard situation column. The last column on the table shows the document number of risk assessment which will be addressed in section 7.4, technical construction file.

EN 292 HAZARD REFERENCE		HAZARD SITUATION	PROCESS	DANGER ZONE	RELATED DOCUMENT
No.	Description				
1.	**Mechanical Hazards**				
1.1	Crushing Hazard	Power-operated workpiece clamping.	During loading, re-orientating and unloading of workpiece.	Between clamps and workpiece.	1.2.1
		Power-operated saw infeed.	During lowering of saw bow.	Between saw blade and work support.	1.2.2
			When leveling the machine	Between the base of machine and floor.	1.2.3
1.2	Shearing Hazard	Power-operated & manual workpiece feeding.	During feeding of workpiece.	Between rear vise and machine bed.	
1.3	Cutting or Severing Hazard	Moving saw blade.	During the sawing process.	At the saw blade.	
1.4	Entanglement Hazard	Power-operated & manual workpiece feeding.	During sawing.	At saw blade and adjacent stationary parts of machine.	
1.5	Drawing-in or Trapping Hazard	Power-operated & manual workpiece feeding.	During the feeding of workpiece.	At workpiece and infeed mechanism and adjacent stationary parts of machine.	
1.6	Impact Hazard	Power-operated work handling.	During the work handling process.	Drop of the workpiece.	
1.7	Stabbing or Puncture Hazard	Handling saw blade.	When replacing saw blade.	Near the saw teeth.	
		Handling saw swarf.	Remove chips from the machine.	On the chip removing device.	
1.8	Friction or Abrasion hazard	Touch the driving belts	During sawing.	The drive belt.	
1.9	High Pressure fluid injection hazard	Hydraulic system breaking.	During the sawing process.	Near the breaking hydraulic pipes.	

EN 292 HAZARD REFERENCE		HAZARD SITUATION	PROCESS	DANGER ZONE	RELATED DOCUMENT
No.	Description				
1.10	Ejection of parts (of machinery and machine parts)	Ejection or gravity fall of parts, of workpiece and swarf	Right after the sawing process.	In front of the machine next to the work tray.	
1.11	Loss of stability (of machinery and machine pats	Unrestrained machine or machine part(maintained in position by gravity) falls or overturns.	When moving the machine.	Next to the machine.	
1.12	Slip, trip and fall hazards in relationship with machinery (because of their mechanical nature)	Ejection or spillage of metalworking fluid and lubricants (also hydraulic fluid if used). Swarf entrained in spilled fluids.	During and after sawing process. During changing of coolant.	Floor and stepping areas on and around machine and workpiece.	
		Work at heights.	During and after maintenance.		
2.	**Electrical hazards, caused for example by:**				
2.1	Electrical contact (direct of indirect)	Contact with live parts.	During machine installation, when connecting the power to the machine.	Near the power line.	
			During repair/service of electrical control unit.	Near the electrical control box.	
2.2	Electrostatic phenomena	(Do not apply). There's no such problem on the machine.			
2.3	Thermal radiation or other phenomena such as ejection of molten particles, and chemical effects from short-circuits, overloads; etc.	(Do not apply). The doesn't use heat source, so there's no such problem.			
2.4	External influences on electrical equipment	Malfunction of the PLC unit.	During the machine running.	Near the saw head or saw blade.	
3.	**Thermal hazards resulting in:**				

EN 292 HAZARD REFERENCE		HAZARD SITUATION	PROCESS	DANGER ZONE	RELATED DOCUMENT
No.	Description				
3.1	Burns and scalds, by a possible contact of persons, by flames or explosions and also by the radiation of heat sources	Ejection of hot swarf.	During sawing.	Near machine.	
		Handling of hot workpiece.	During unloading the workpiece.	On the stock cut	
		Contact with hot saw blade (both stationary and moving).	During unloading or replacing the saw blade.	At sawing position. Near saw blades.	
3.2	Health-damaging effects by hot or cold work environment	(Do not apply).. The machine doesn't use any heat source.			
4.	**Hazards generated by noise, resulting in:**				
4.1	Hearing losses (deafness), other physiological disorders (e.g. loss of balance, loss of awareness)	During sawing processes. Motion of power generation and transmission elements. Acoustic resonance caused by moving saw teeth. Audible resonance of workpiece.	During running and sawing.	Near the machine.	1.2.x
			When the saw blade is not mounted correctly.		1.2.x
4.2	Interferences with speech communication, acoustic signals, etc.	(Do not apply). The machine doesn't use such kind of communication.			
5.	**Hazards generated by vibration (resulting in a variety of neurological and vascular disorders)**	Workpiece held by operator.(feeding or clamping vibration).	During the sawing process.	On the workpiece. At machine manual controls.	
6.	**Hazards generated by radiation, especially by:**	(Do not apply). There's no radiation problem on the machine.			
6.1	Electrical arcs	(Do not apply). There's no electric arc on the machine.			

EN 292 HAZARD REFERENCE		HAZARD SITUATION	PROCESS	DANGER ZONE	RELATED DOCUMENT
No.	Description				
6.2	Lasers	(Do not apply). The machine has no laser equipment.			
6.3	Ionizing radiation sources	(Do not apply). The machine doesn't have this source.			
6.4	Machines making use of high frequency electromagnetic fields	(Do not apply). The machine doesn't use such device.			
7.	**Hazards generated by materials and substances processed, used or exhausted by machinery for example:**				
7.1	Hazards resulting from contact with or inhalation of harmful fluids, gases, mists, fumes and dusts	Exhausted fluid droplets from lubrication, hydraulic or metalworking fluids or particles of work material exhausted form processing.	During the sawing process. When replacing the worn steel brush. When servicing the hydraulic system.	Near the saw blade along the line of blade. Near the steel wire brush.	
7.2	Fire or explosion hazard	Inflammable workpiece. Mist generation. Loss of cooling fluid supply to sawing. During rupture by flexure of electrical or/and hydraulic power or lubricant supply cables.	When cutting hazardous material.	Near the workpiece.	
			During the sawing process.	Near the saw blade and workpiece.	
			During the sawing process.	Near the line of hydraulic system.	
7.3	Biological and micro biological (viral or bacterial) hazards	(Do not apply). The machine has nothing to do with this kind of hazard.			

EN 292 HAZARD REFERENCE		HAZARD SITUATION	PROCESS	DANGER ZONE	RELATED DOCUMENT
No.	Description				
8.	**Hazards generated by neglecting ergonomic principles in machine design (mismatch of machinery with human characteristics and abilities) caused for example by:**				
8.1	Unhealthy postures or excessive efforts	Lifting and reaching while handling workpiece, saw blades and machine parts.	During loading, unloading and maintenance. When use manual mode control.	At load/unload and saw blade mounting positions and maintenance action points.	
8.2	Inadequate consideration of human hand-arm or foot-leg anatomy	(Do not apply). The machine is not supposed to be used with these human body.			
8.3	Neglected use of personal protection equipment	Handling of workpiece, saw blades, machine assemblies, etc.	When loading the workpiece. When replacing the saw blade.		
8.4	Inadequate area lighting	Judgment and accuracy of manual actions impaired during handling/positioning of workpiece and saw blades	During loading and unloading. During process control and saw blade handling.	Near the workpiece. Near the saw blades.	
8.5	Mental overload or underload, stress, etc.	Increased incidence of reasonably foreseeable misuse: inattention, inadvertent operation of controls.	During the long period of working on the machine.	Near the saw bow, saw blade, and clamping vise.	
8.6	Human error	Reasonably foreseeable misuse. Inadvertent operation of control. Incorrect workpiece and saw blade handling setting.	When replacing the saw blade. When replacing the motor driving belts.	Near the drive wheel. Near the moving parts.	

EN 292 HAZARD REFERENCE		HAZARD SITUATION	PROCESS	DANGER ZONE	RELATED DOCUMENT
No.	Description				
9	Hazard combinations				
10	Hazards caused by failure of energy supply, breaking down of machinery parts and other functional disorders, for example:				
10.1	Failure of energy supply, (of energy and/or control circuits)	Malfunctions of control with consequent misapplication of stored energy or power. Over speeding of motor(s). Power work holding fails. Part breakage causes machine elements to move under residual forces (inertia, gravity, spring/energy storage means) causing external elements to move unexpectedly.	During the sawing process.	Between saw bow and saw bed.	
10.2	Unexpected ejection of machine parts or fluids	Injury caused by the ejected parts or fluids.	During the machine running process.	Near the saw blades and fluid hoses.	
10.3	Failure, malfunction of control system (unexpected start up, unexpected overrun)	The unexpected motion of the machine which cause the injury of human body.	When the machine is running.	Near the vise, saw blade, saw head.	

EN 292 HAZARD REFERENCE		HAZARD SITUATION	PROCESS	DANGER ZONE	RELATED DOCUMENT
No.	Description				
10.4	Errors of fitting	Machine elements fail or swing unexpectedly.	When handling/maintaining the machine or during the sawing processes.	At machine. Machine elements retained in a safe condition by a machine element subjected to either regular functional recondition, replacement or substitution or foreseeable misuse or abuse.	
10.5	Overturn, unexpected loss of machine stability	When moving the machine.			
11	**Hazards caused by (temporary) missing and/or incorrectly positioned safety related measures/means, for example:**				
11.1	All kinds of guard	Hazards protected by movable and adjustable guards not lifted with interlocking to machine controls.	During operation, process control and maintenance.	At machine.	
11.2	All kinds of safety related (protection) devices				
11.3	Starting and stopping devices	Unsuitable positioning and type(s) of controls.	During operation and process control.	At controls and load/unload position.	
11.4	Safety signs and signals				
11.5	All kinds of information or warning devices				
11.6	Energy supply disconnecting devices				
11.7	Emergency devices				

EN 292 HAZARD REFERENCE		HAZARD SITUATION	PROCESS	DANGER ZONE	RELATED DOCUMENT
No.	Description				
11.8	Feeding/removal means of workpieces				
11.9	Essential equipment and accessories for safe adjusting and/or maintaining	High stresses and incorrect positioning of machine elements subjected to operating forces.	During process control and maintenance.	At saw blades, power transmission, workpiece clamping and feeding elements.	
11.10	Equipment evacuating gases, etc.	(Do not apply). There's no such equipment on the machine.			

Section 4

ELECTRICAL SYSTEM

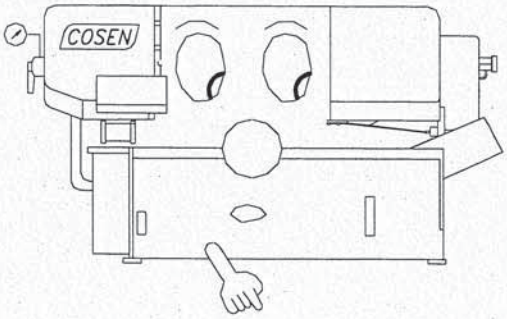

SECTION 4

ELECTRICAL SYSTEM

4.1 INTRODUCTION

All of the electric components being used on this machine have obtained the CE designations. Therefore, the only reason to replace or repair the electrical system is the limited life for each part.

In addition, the IP ratings of the electric components are IP54 or above which comply with the safety rules of CE.

4.2 LAYOUT OF THE ELECTRICAL COMPONENTS

Both the layouts of the electric components in the electrical box and on the machine are shown in Fig. 4.1 and Fig. 4.2 below.

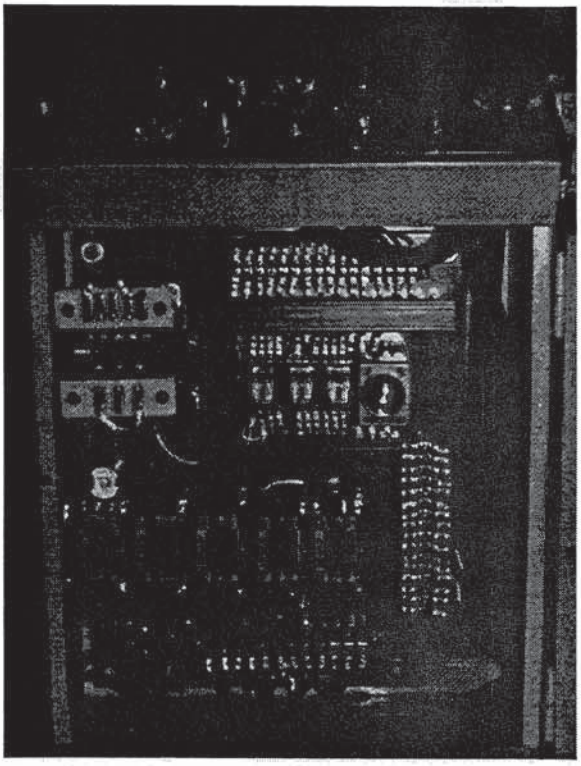

Fig. 4.1 The Electrical Components Layout In The Electrical Box

AH- 1010JAY WIRE DIAGRAM

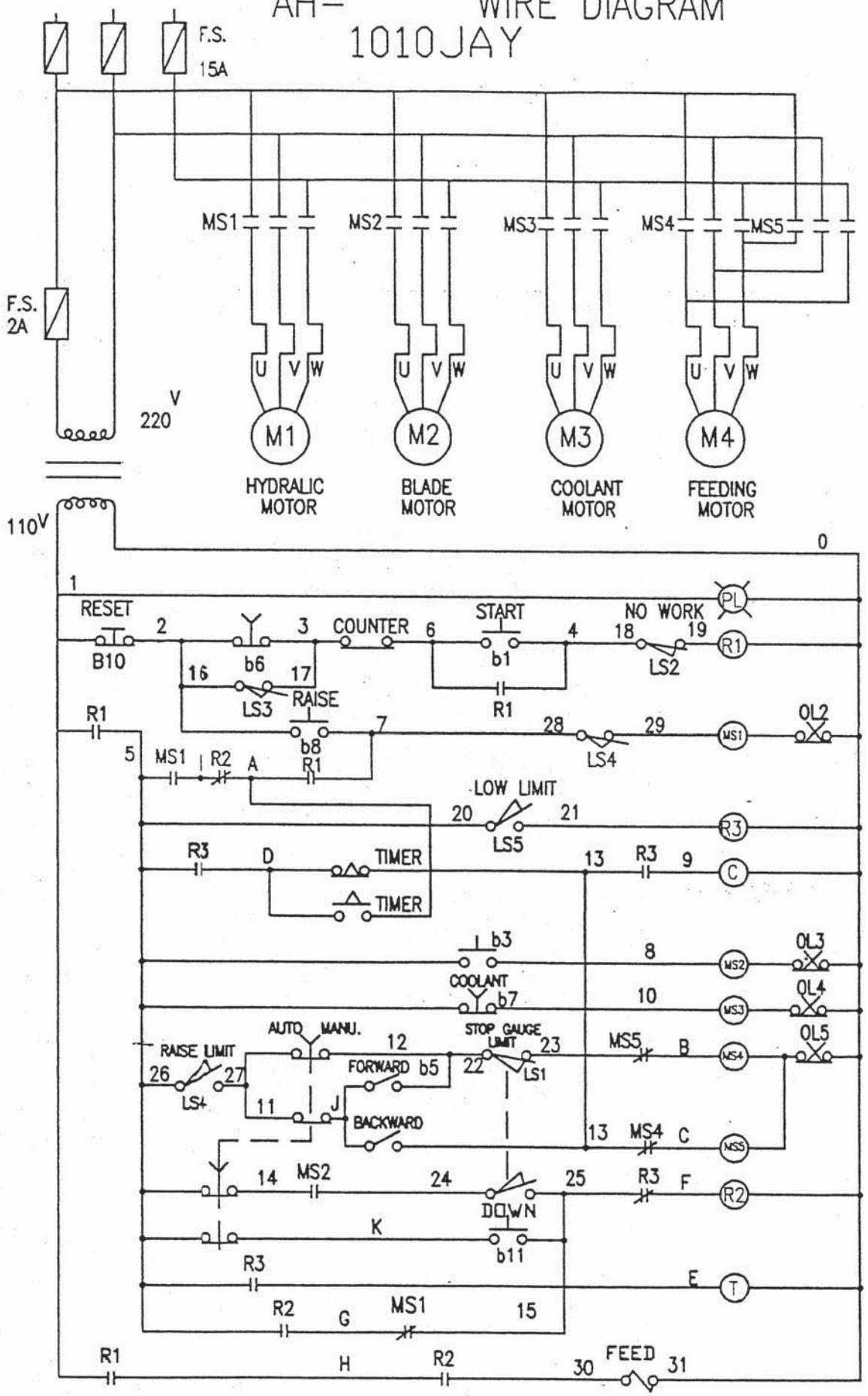

Section5

HYDRAULIC SYSTEM

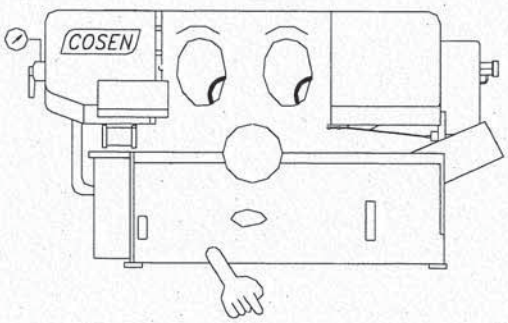

SECTION 5

HYDRAULIC SYSTEM

5.1 INTRODUCTION

The hydraulic system used in this semi-automatic bandsaw is very simple since the hydraulic force is used to lift the sawhead only. After rising to the top position, the sawhead can be held by turning the downfeed rate control dial to zero. By the way, the descending speed of the sawhead is also controlled by this flow control valve. In addition, a solenoid valve is used to control the moving direction of the lifting cylinder.

All of the hydraulic units are installed in the base cabinet so that the noise of the hydraulic units (i.e. hydraulic motor and pump) is isolated and then the machine performs quietly.

The hydraulic circuit of this system is shown in section 5.2 while the hydraulic layout is shown in section 5.3, both of them can help while considering the motion sequence of this machine.

Please refer to the hydraulic circuit and layout and disconnect all the powers before doing maintenance. COSEN or the local agent will supply the hydraulic components if needed.

5.2 THE HYDRAULIC CIRCUIT

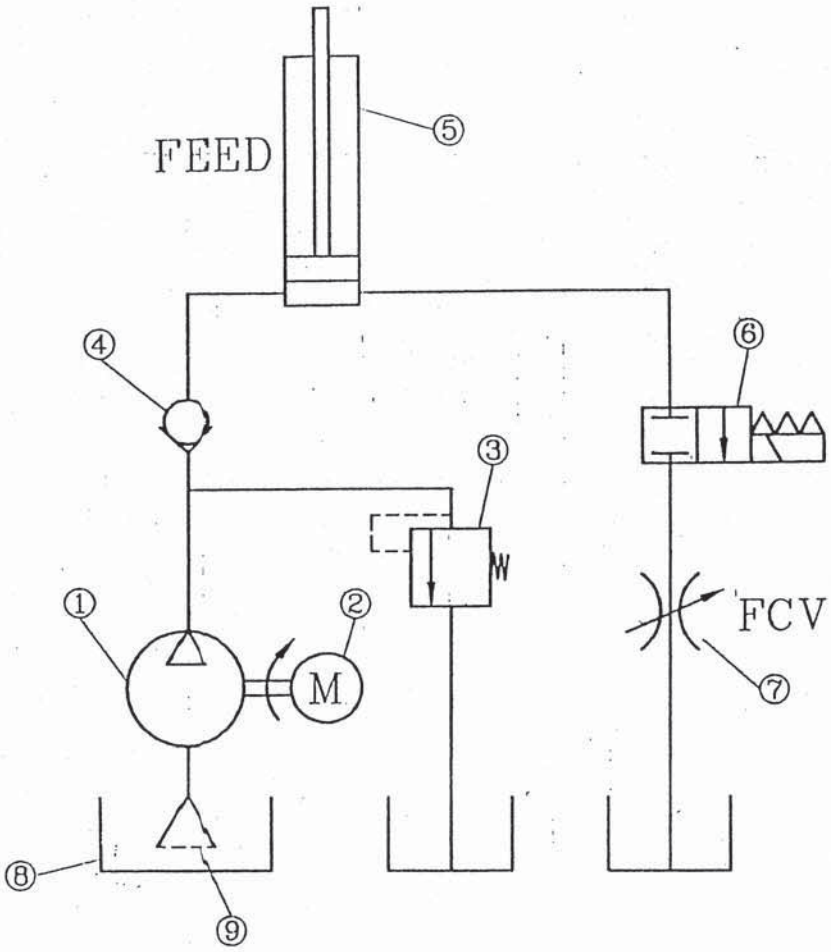

INDEX	PART NAME
1	Hydraulic Pump
2	Hydraulic Motor
3	Relief Valve
4	Check Valve
5	Lifting Cylinder
6	Solenoid Valve
7	Flow Control Valve
8	Hydraulic Oil Tank
9	Filter

Fig. 5.1 The Hydraulic Circuit

5.3 THE LAYOUT OF THE HYDRAULIC SYSTEM

INDEX	PART NAME
1	Hydraulic Pump
2	Hydraulic Motor
3	Relief Valve
4	Check Valve
5	Lifting Cylinder
6	Solenoid Valve
7	Flow Control Valve
8	Hydraulic Oil Tank

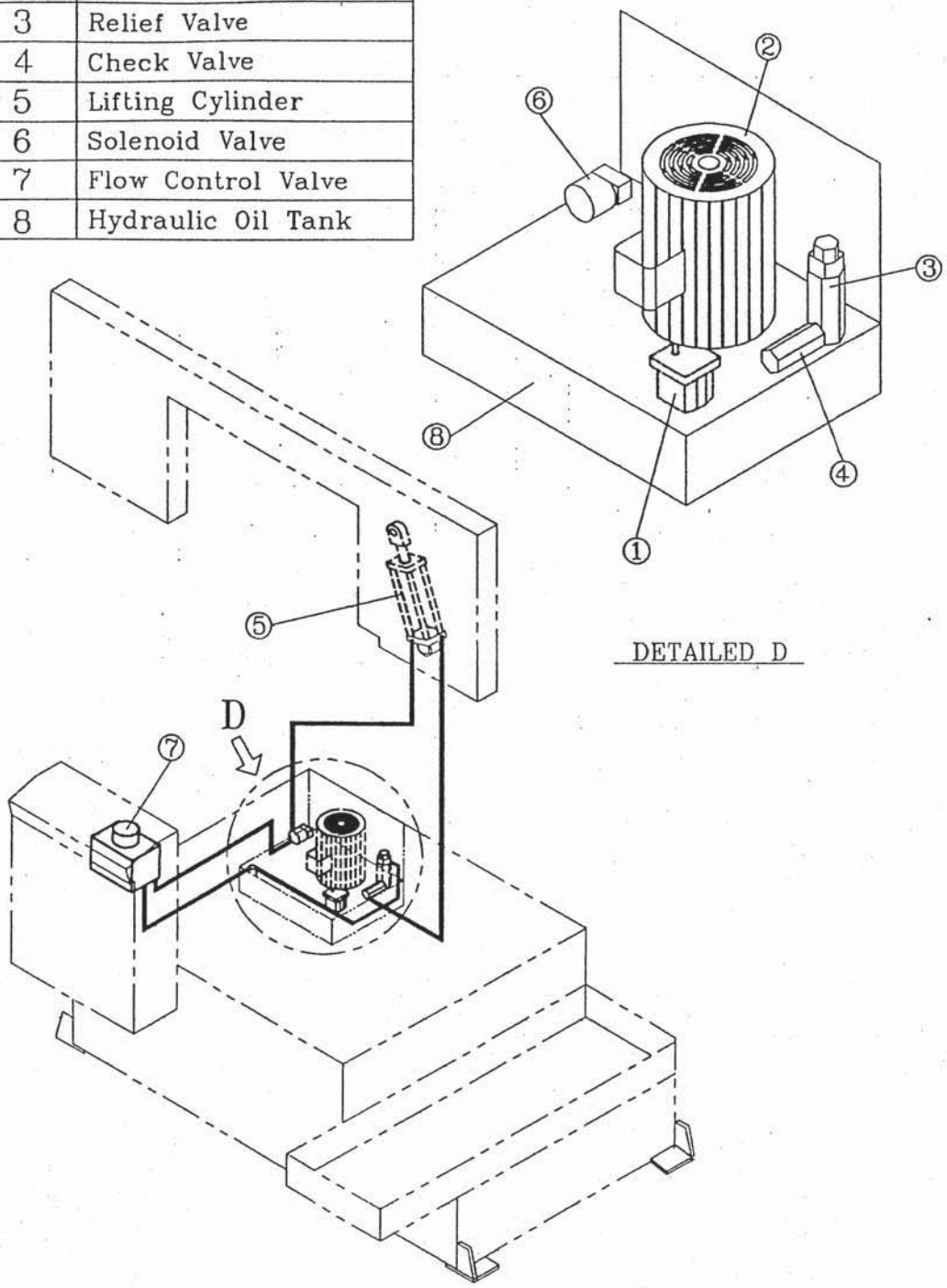

Fig. 5.2 The layout of the hydraulic system

Section 6

BANDSAW CUTTING - A PRACTICAL GUIDE

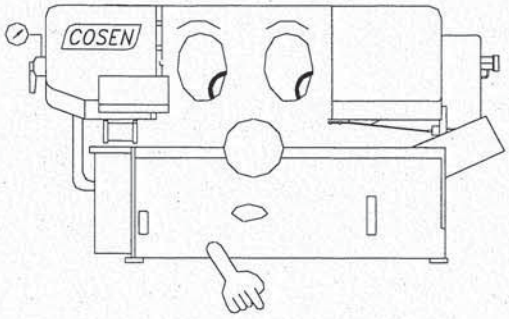

TITE_SEC.DOC

SECTION 6

BAND SAW CUTTING - A PRACTICAL GUIDE

6.1 INTRODUCTION

COSEN band saw machines are designed to be installed with high quality using high speed saw blades for maximizing productivity. To be able to use this kind of high performance band saw blade, the machine has to be of rugged design, have high quality saw blade guides, have sufficient motor horse power for high saw band speeds, and has to be able to apply necessary tension to the saw bands. Your COSEN machine has all these features to provide a better service for you.

The saw blade is guided through the cutting area by roller guides to keep it straight as it comes off the driving wheels. The precision carbide inserted guides then holds the blade securely and accurately throughout the sawing process. The tension of the saw blade is adjusted through the tensioning device on the strong saw bow. The cutting feed and down feed pressure of the blade is regulated automatically by hydraulic regulation.

6.2 BAND SAW BLADE SELECTION

The factors affecting cutting performance are:

- Type of material
- Material size and shape
- Guide spacing
- Blade selection
- Blade speed and feed
- Blade tension
- Blade vibration
- Coolant

Material and its relation to the cutting rate:

- ☐ Depending on the hardness of the material the cutting rate will increase or decrease. For example, it takes more time to cut stainless steel than to cut cast iron.
- ☐ The surface conditions will also affect the cutting rate. If there are places on the surface on the material which are hard, a slower blade speed will be required or blade damage may result.
- ☐ It will be slower to cut tubing than to cut solids, because the blade must enter the material twice, and because coolant will not follow the blade as well.
- ☐ Tough or abrasive materials are much harder to cut than their machinability rating would indicate.
- ☐ Tooth spacing is determined by the hardness of the material and its thickness in cross section.
- ☐ Tooth set prevents the blade from binding in the cut. It may be either a "regular set" (Also called a "Raker Set") or a "Wavy Set".

- The regular or raker set is most common and consists of a pattern of one tooth to the left. Set to the right, to the left and one which is straight, or unset. This type of set is generally used where the material to be cut is uniform in size and for contour cutting.
- Wavy set has groups of teeth set alternately to right and left, forming a wave-like pattern. This reduces the stress on each individual tooth, making it suitable for cutting thin material or a variety of materials where blade changing is impractical. Wavy set is often used where tooth breakage is a problem. This is shown in Fig. 6.1 as follows:

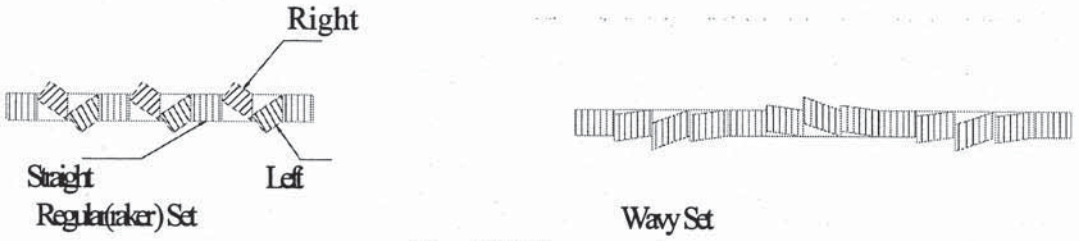

Fig. 6.1 The saw set

Blade Speed and Feed:

Blade speed is generally limited by vibration and the ability to keep the blade sufficiently cool to avoid dulling the teeth. A blade which is running fast and taking a very light cut will dull quickly because the tips of the teeth will overheat from the rubbing action. If, however, we force the blade teeth deeper into the material, the blade will be less sensitive to heat, because the teeth are cutting more and rubbing less.

Blade selection:

There are five types of blade material generally used:

- Hard-back carbon
- Semi-high speed
- High speed
- Carbon
- Electron-welded blade

In most high speed production cutting either the semi-high speed or the electron-welded band are used. Electron welded blade is the best blade. But it is also the most expensive. To construct the electron-welded blade, M-2 tool steel is welded to the blade back. Therefore the blade is capable of very high surface speed. The semi-high speed blade is used more in structural because it is capable of taking a great deal more abuse. The hard-back carbon blade's teeth does not have red-hardness but if the blade is run slowly it can be very economical. We do not recommend carbon blades because the back of the blade is not sufficiently strong to stand adequate tension and because it has poor resistance to heat and abrasion. Usually, the coarse hook tooth blade will give better results, but accurate feed control is a must with a coarse tooth blade.

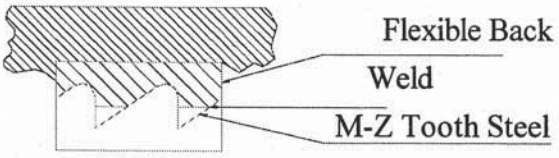

Fig. 6.2 Electron Welded Blade

A particular blade may have teeth which are too hard at the tips, causing them to break off in the material. This is most likely to happen as a result of chips wedging together in the cut. A broken tooth in the material can easily cause dulling on one side of the entire blade before it is dislodged from the cut.

Tooth Form and Spacing:

The selection of a tooth form generally is determined by the material to be cut. There are three general factors to consider: Tooth form, style or shape of the teeth; Tooth spacing, The number of teeth to the inch; and tooth set, which provides clearance for the body of the blade. Three styles of tooth are shown in Fig.6.3 below:

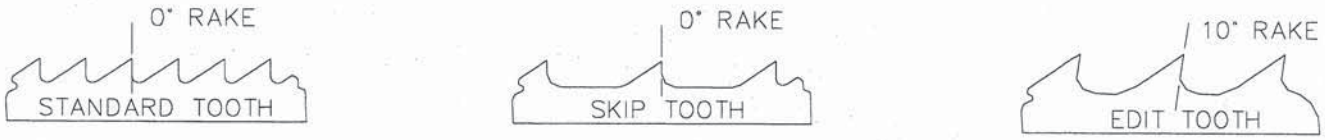

Fig. 6.3 Three styles of tooth

Material Size and Shape:

The optimum material width for a band saw blade is 1 inch wide by 0.35 thick and is about 5 inches long. Below this width tooth loading may become excessive and the cutting rate must be reduced. Above this width blade control begins to be lost, as discussed below. Since the blade "sees" only that material it is cutting, the shape of the stock being cut will also affect cutting speeds, particularly if the piece is excessively wide or if it varies in the dimensions being cut.

Guide Spacing:

The rigidity of the blade is a function of guide spacing, with rigidity being reduced to the third power as the distance between the guides increases. For example, with guides spaced 2 inches apart, blade deflection might be approximately 0.2. Under the same conditions, but with the guides spaced at 4 inches apart, blade deflection would be approximately 0.8.

This is a much simplified version of the formula, because it does not consider band tension or guide design. It is important to recognize, for example that rollers are considered as a pivotal contact. Whereas carbide faces could be considered as anchored supports. A more complete deviation, including band tension and guide design, is included in Roark's handbook, "Formula for stress and strain".

6.3 Some Sawing Practices

6.3.1. Selection of Saw Pitch :

Sawing "Rules of Thumb":

1. The thinner the stock, the finer the saw pitch
2. The thicker the stock, the coarser the saw pitch
3. The more difficult the stock, the finer the saw pitch
4. The softer the material , the coarser the saw pitch

Always have at least three teeth in contact with the material being cut.

6.3.2. Material Size and Saw Pitch

Anytime during the cutting operation, at least three teeth must be in contact with the material being cut. Figure 6.4 shows some sawing practices:

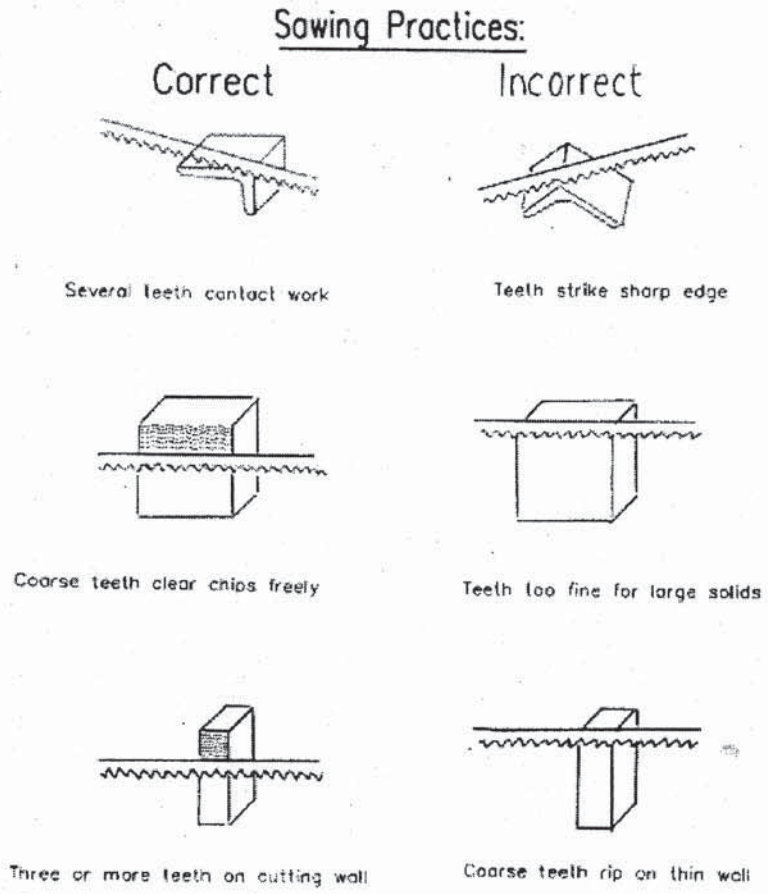

Fig. 6.4 Some sawing practices

Solid Stock:

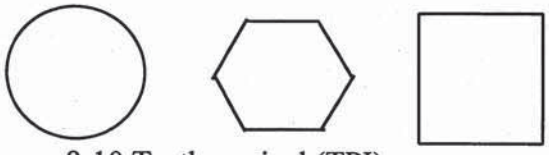

up to 25 mm	- 1"	8-10 Teeth per inch(TPI)
25-100mm	- 1"-4"	6-8 TPI
100-250mm	- 4-10"	3-4 TPI

Structurals:

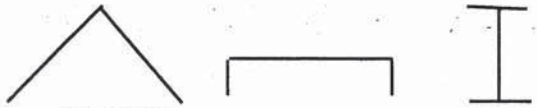

up to 10 mm	- 3/8"	10-8 TPI
10-20mm	- 3/8-3/4"	8-10 TPI
above 20mm	- 3/4"	6-8 TPI

Solid:

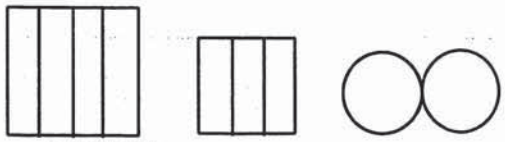

up to 20mm	- 3/4"	8-10 TPI
20-80mm	- 3/4-3.1/4"	2- 8 TPI
above 80 mm	- 3.1/4"	4- 6 TPI

You can refer to the feed and speed chart (Metric Table) as follows:

Section 7

MAINTENANCE

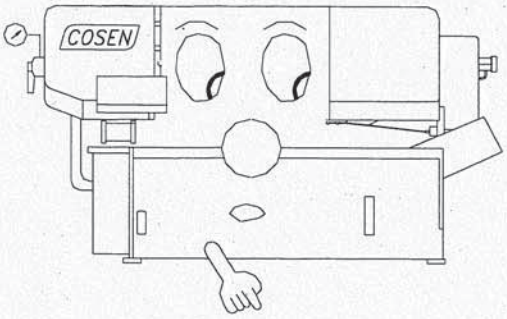

SECTION 7

MAINTENANCE

7.1 MAINTENANCE SCHEDULES

The four recommended schedules of maintenance are suggested below,

A. DAILY maintenance
B. MONTHLY maintenance
C. FIRST THREE MONTH maintenance
(replacement of the transmission oil)
D. EVERY HALF OF A YEAR maintenance

A. DAILY MAINTENANCE

⇒ BEFORE WORK

✓1. Check the hydraulic oil level.
✓2. Check the cutting fluid level and replace it if contaminated or deteriorated.
✓3. Check the saw blade to make sure that it is properly positioned on the bandwheels and clamped by the inserts.
✓4. Check the wire brush to ensure proper contact with the saw blade. Replace it if worn out.

⇒ AFTER WORK

✓1. Remove saw chips and clean the machine.
✓2. Lubricate following positions,
• Surface of the bed

B. MONTHLY MAINTENANCE

Grease following points:

1. Bandwheels

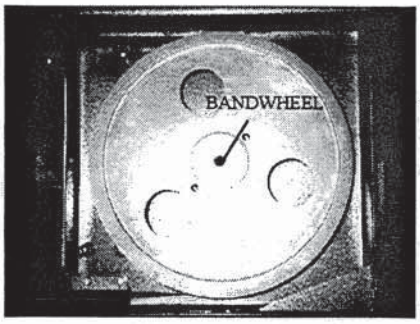

2. Blade Tension Device

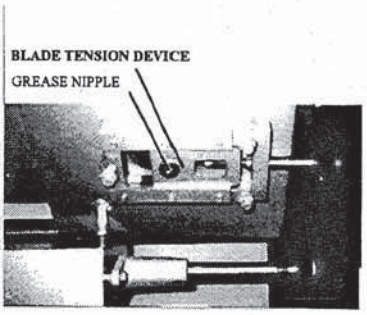

Recommended Grease Oil:
* Shell Alvania EP Grease 2
* Mobil Mobilplex 48

C. FIRST THREE MONTHS (TRANSMISSION OIL REPLACEMENT)

Replace the transmission oil after operating for three months (or 600 hours).

Recommended Transmission Oil:

* Shell Tellus 75
* Mobil DTE Oil AA

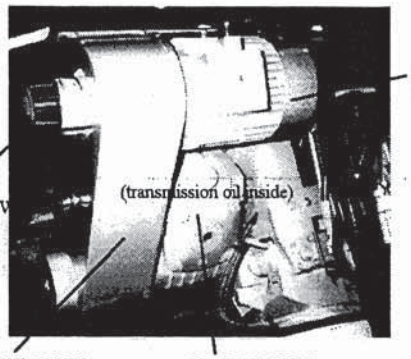

D. EVERY HALF OF A YEAR MAINTENANCE

✓1. Clean the filters of the cutting fluid.

✓2. Replace the transmission oil for every half of a year (or 1200 hours). Check the sight gauge to ascertain the transmission oil level.

Recommended TRANSMISSION OIL:

Shell Tellus 75

Mobil DTE Oil AA

✓3. Replace the hydraulic oil.

Recommended HYDRAULIC OIL:

Shell Tellus 27

Mobil DTE Oil Light Hydraulic 28

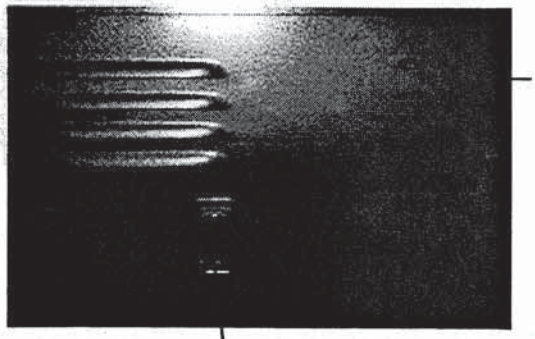

7.2 STORAGE CONDITIONS OF THE MACHINE

Your machine is supposed to be stored in the following conditions :

(1) Disconnect power cord.
(2) Ambient temperature: 5-40° C.
(3) Relative humidity: 30%-95%.
(4) Atmosphere: Use a plastic canvas to cover machine to avoid excessive dust, acid fume, corrosive gases and salt.
(5) Avoid exposing to direct sunlight or heat rays.
(6) Avoid exposing to abnormal vibration.

7.3 DISPOSAL OF THE MACHINE

Drain all of the cutting fluid and oil off and carefully treat them to avoid pollution.

Section 8

SYSTEMS TROUBLESHOOTING

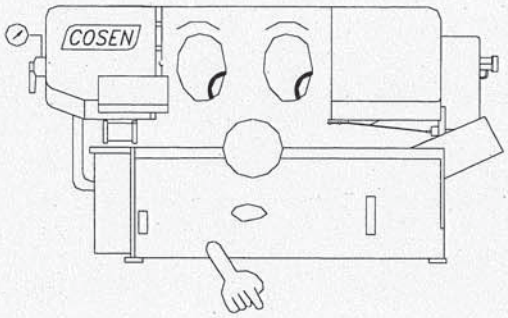

TITE_SEC.DOC

SECTION 8

SYSTEMS TROUBLE SHOOTING

8.1 INTRODUCTION

All the machines being manufactured by COSEN pass a 72 hours continuously running test before shipping out and COSEN is responsible for the after sales service problems during the warranty period if the machine are used normally. However, there still exist the some unpredictable problems which may disable the machine from operating.

Generally speaking, the system troubles in this machine model can be classified into three types, namely GENERAL TROUBLES, MOTOR TROUBLES and BLADE TROUBLES. Although you may have other troubles which can not be recognized in advance, such as malfunctions due to the limited life-span of mechanical, electric or hydraulic parts of the machine.

As a twenty year old company, COSEN has accumulated enough experiences and technical data to handle all of the regular system troubles. Meanwhile, the engineering department of COSEN had been continuously improving the machines to prevent all possible troubles.

It is hoped that you will give COSEN your maintenance experience and ideas so that both sides can achieve the best performance.

8.2 GENERAL TROUBLES AND SOLUTIONS

WARNING DISCONNECT POWER CORD TO MOTOR BEFORE ATTEMPTING ANY REPAIR OR INSPECTION

TROUBLE	PROBABLE CAUSE	SUGGESTED REMEDY
Motor stalls	Excessive belt tension	Adjust belt tension so that belt does not slip on drive pulley while cutting (1/2" Min. deflection of belt under moderate pressure.)
	Excessive head pressure	Reduce head pressure. Refer to Operating Instructions "Adjusting Feed".
	Excessive blade speed	Refer to Operating Instructions "Speed Selection".
	Improper blade selection	Refer to Operating Instructions "Blade Selection".
Cannot make square cut	Dull blade	Replace blade.
	Guide rollers not adjusted properly	Refer to Adjustments.
	Rear vise jaw not adjusted properly	Set fixed vise jaw 90° to blade.
	Excessive head pressure	Reduce head pressure. Refer to operating instructions "Adjusting Feed."
Increased cutting time	Dull blade	Replace blade
	Insufficient head pressure	Increase head pressure. Refer to Operating Instructions "Adjusting Feed."
	Reduce blade speed	Refer to Operating Instructions "Speed Selection."
Will not cut	Motor running in wrong direction	Reverse rotation of motor (Motor rotation C.C.W. pulley end.)
	Blade teeth pointing in wrong direction	Remove blade, turn blade inside out. Re-install blade. (Teeth must point in direction of travel.)
	Hardened material	Use special alloy blades (Consult your Industrial Distributor for recommendation on type of blade required.)

8.3 MOTOR TROUBLES AND SOLUTIONS

TROUBLE	PROBABLE CAUSE	SUGGESTED REMEDY
Motor will not start	Magnetic switch open, or protector open.	Reset protector by pushing red button (inside electric box.)
	Low voltage	Check power line for proper voltage.
	Open circuit in motor or loose connections.	Inspect all lead terminations on motor for loose or open connections.
Motor will not start, fuse or circuit breakers "blow".	Short circuit in line, cord or plug.	Inspect line, cord and plug for damaged insulation and shorted wire.
	Short circuit in motor or loose connections	Inspect all lead terminations on motor for loose or shorted terminals or worn insulation on wires.
	Incorrect fuses or circuit breakers in power line.	Install correct fuses or circuit breakers.
Motor fail to develop full power. (Power output of motor decreases rapidly w/decrease in voltage at motor terminals.)	Power line overloaded with lights, appliances and other motors.	Reduce the load on the power line.
	Undersize wires or circuit too long.	Increase wire sizes, or reduce length of wiring
	General overloading of power company's facilities.	Request a voltage check from the power company
Motor overheat	Motor overloaded.	Reduce load on motor
	Air circulation through the motor restricted.	Clean out motor to provide normal air circulation through motor.
Motor stalls (Resulting in blown fuses or tripped circuit breakers)	Short circuit in motor or loose connections.	Inspect terminals in motor for loose or shorted terminals or worn insulation on lead wires.
	Low voltage	Correct the low line voltage conditions.
	Incorrect fuses or circuit breakers in power line.	Install correct fuses circuit breakers.
	Motor overloaded	Reduce motor load.
Frequent opening of fuses or circuit breakers.	Motor overloaded	Reduce motor load
	Incorrect fuses or circuit breakers.	Install correct fuses or circuit breakers.

8.4 BLADE TROUBLES AND SOLUTIONS

WARNING DISCONNECT POWER CORD TO MOTOR BEFORE ATTEMPTING ANY REPAIR OR INSPECTION

TROUBLE	PROBABLE CAUSE	SUGGESTED REMEDY
Teeth strippage	Too few teeth per inch	Use finer tooth blade
	Loading of gullets	Use coarse tooth blade or cutting lubricant.
	Excessive feed	Decrease feed
	Work not secured in vise	Clamp material securely
Blade breakage	Teeth too coarse	Use a finer tooth blade
	Misalignment of guides	Adjust saw guides
	Dry cutting	Use cutting lubricant
	Excessive speed	Lower speed. See Operating Instructions "Speed selection."
	Excessive speed	Reduce feed pressure. Refer to Operating Instructions "Adjusting Feed."
	Excessive tension	Tension blade to prevent slippage on drive wheel while cutting.
	Wheels out of line	Adjust wheels
Run-out and Run-in	Guides out of line	For a straight and true cut, realign guides, check bearings for wear.
	Excessive pressure	Conservative pressure assures long blade life and clean straight cuts.
	Support of blade insufficient	Move saw guides as close to work as possible.
	Material not properly secured in vise	Clamp material in vise, level and securely.
	Blade tension improper	Loosen or tighten tension on blade.
Blade twisting	Blade not in line with guide bearings	Check bearings for wear and alignment.
	Excessive blade pressure	Decrease pressure and blade tension
	Blade binding in cut	Decrease feed pressure
Premature tooth wear	Dry cutting	Use lubricant on all materials, except cast iron
	Blade too coarse	Use finer tooth blade
	Not enough feed	Increase feed so that blade does not ride in cut
	Excessive speed	Decrease speed

Section 9

PARTS LIST

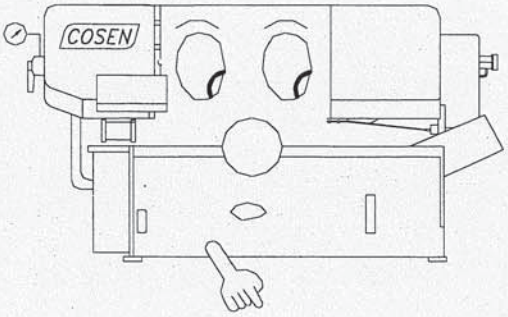

TITE_SEC.DOC

1. SAW BOW

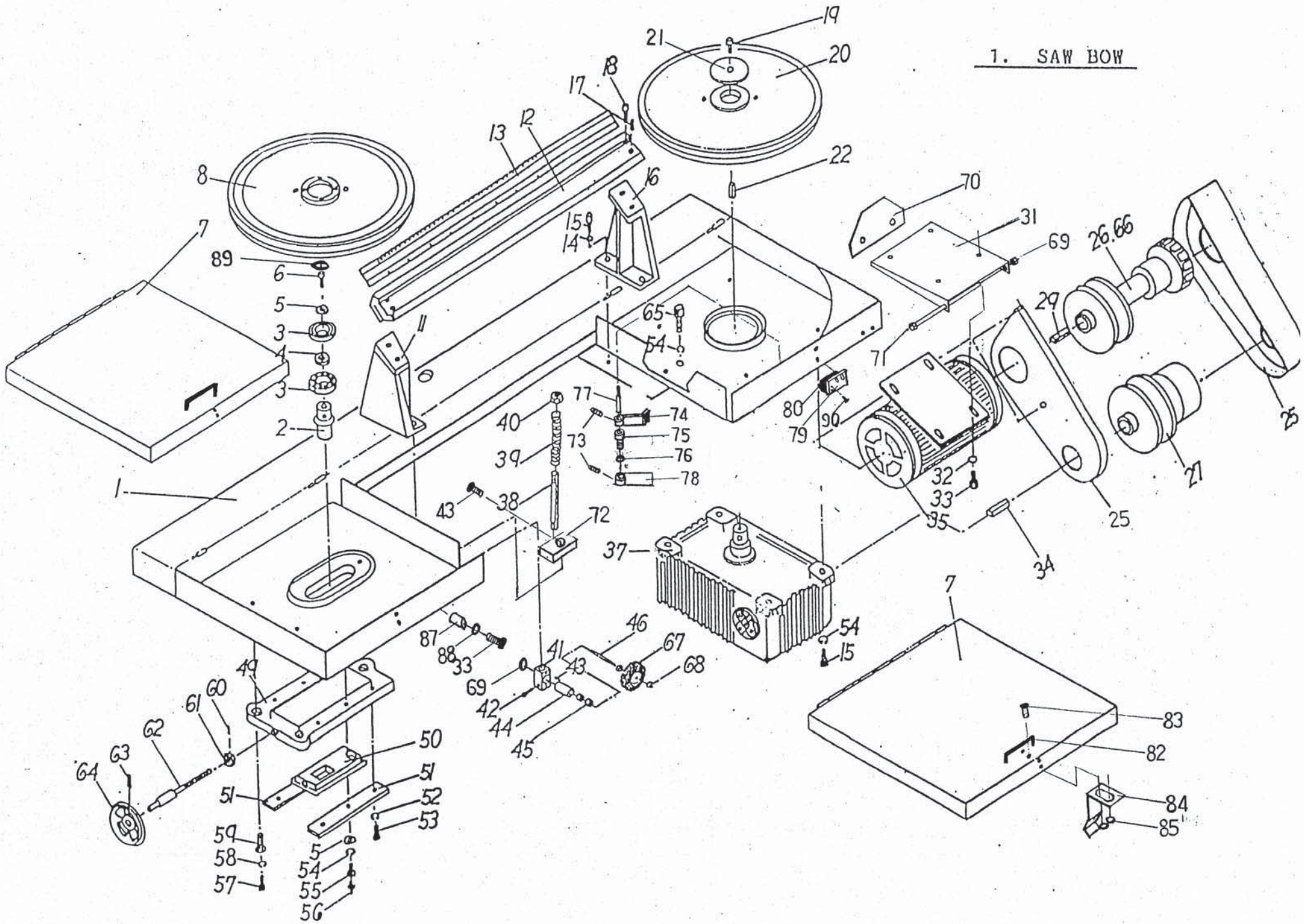
19
21
20
18
17
13
12
22
8
16
70
31
69
26.66
7
89
6
15
14
5
3
4
3
2
11
65
54
29
71
77
74
75
76
78
73
40
39
38
43
72
80
79
90
32
33
35
25
27
34
1
37
7
87
88
33
46
67
68
54
15
41
43
69
42
44
45
49
60
61
62
63
64
50
51
51
52
53
59
58
57
5
54
55
56
83
82
84
85

CHART 1 SAW BOW

NO.	PART NO.	PART NAME	PART NAMEI N CHINESE	PART SPEC.	Q'TY
1	AJC-7018	Saw bow	弓鋸頭		1
2	MJA-2016	Idle wheel shaft	上輪軸		1
3	PP-14130	Bearing	軸承	6205Z	2
4	MAE-2025	Bearing washer	上輪軸墊圈		1
5		Washer	平面華司	1/2	1
6		Bolt	外六角螺絲	1/2*3/4	1
7	AJC-7012	Wheel cover	上下輪箱蓋		2
8	MJA-2017A	Idle wheel	上輪		1
9				Deleted	
10				Deleted	
11	MJA-8003	Bracket (left)	左鋸臂滑板固定座		1
12	MJA-2025	Dovetail guide	鋸臂滑板		1
13	AJC-7010	Gauge plate(ruler)	銘板		1
14		Spring washer	彈簧華司	1/2	4
15		Bolt	內六角螺絲	1/2-12W*1 1/4	8
16	MJA-8004	Bracket (right)	右鋸臂滑板固定座		1
17		Set screw	止付螺絲	5/16-18UNC*3/4	8
18		Screw	內六角螺絲	3/8-16UNC*1 1/4	4
19		Screw	內六角螺絲	5/16-20UNC*3/4	1
20	MJA-2012	Drive wheel	下輪		1
21	MJA-2013	Washer	下輪墊圈		1
22		Key	方鍵	10*8*20L	1
23				Deleted	
24				Deleted	
25	AJC-7040	Pulley cover (A)	皮帶輪護蓋		1
26	PP-16210-1	Non-step variator (A)	無段變速普利A		1
27	PP-16210-2	Non-step variator (B)	無段變速普利B		1
28				Deleted	1
29		Key	方鍵	7*7*40L	1
30				Deleted	
31	AJC-7033	Motor mounting plate	馬達底板		1
32		Spring washer	彈簧華司	3/8	4
33		Screw	外六角螺絲	3/8	5
34		Key	方鍵	7*7*25L	1
35	PP-31043	Motor	馬達	2HP	1
36				Deleted	
37	PP-16031B	Gear box	減速機	80#	1
38	ACA-2027	Stud	鋼刷調整桿		1
39	ACA-2028	Spring	彈簧		1
40		Nut	螺帽	1/2W-13	1
41	ACA-2026	Adapter	鋼刷管座		1
42		Screw	內六角螺絲	1/4-20UNC*3/4	
43		Set screw	止付螺絲	1/4-20UNC*3/8	2
44	ACA-2024	Bushing	鋼刷軸套		1
45	PP-14010	Bearing	軸承	HK0810	2
46	AJC-7014	Brush shaft	鋼刷軸		2

CHART 1 SAW BOW

NO.	PART NO.	PART NAME	PART NAMEI N CHINESE	PART SPEC.	Q'TY
47				Deleted	
48				Deleted	
49	MJA-20199	Tension plate	張力調整滑座		1
50		Adjusting slide	張力調整板		1
51		Guide plate	壓條		2
52		Spring washer	彈簧華司	1/4	6
53		Screw	外六角螺絲	1/4-20UNC*3/4	6
54		Spring washer	彈簧華司	1/2	8
55	MAE-1010A	Bolt	油嘴螺絲		1
56		Nipple	油嘴	1/16	1
57		Screw	外六角螺絲	3/8-16UNC*2	3
58		Spring washer	彈簧華司	3/8	3
59	MJA-2056	Adjusting bolt	張力調整螺絲		3
60		Spring pin	彈簧梢	φ3*1"	1
61	MJA-2024	Collar	張力調整固定圈		1
62	MJA-2023	Blade tension screw	張力調整螺桿		1
63		Set screw	止付螺絲	M6*8L	1
64	SJY-1103	Hand wheel	手輪		1
65		Screw	內六角螺絲	1/2-12W*1 1/2	6
66		Variable belt	變速皮帶	1422V-400	1
67		Wire brush	鋼刷	90*8mm	1
68	ACA-2025	Nut	圓形螺母		1
69		Nut	螺母	5/16-18UNC	4
70	AJC-7044	Fixed plate	馬達座固定板		1
71	AJC-7032	Motor suoppet rod	馬達支撐桿		1
72	AJC-7006	Bracket	鋼刷固定座		1
73		Set screw	止付螺絲	1/4*2/8	2
74	ACA-2043	Plate	鋸片接觸板		1
75	AJC-7015	Shaft sleeve	接觸板軸套		1
76		Nut	螺母	5/8*11	1
77	AJC-7039	Shaft	鋸片接觸板軸		1
78	ACA-2044	L.S Plate	開關接觸板		1
79	ACA-2047	Fixed plate	開關固定板		1
80	PP-90020	Limit switch	限動開關	WLD-TZ5101	1
81	SJM-4031	Bracket	變速器擋板		1
82	PP-52080	Handle	輪箱把手		2
83		Screw	丸頭螺絲	3/16*3/8	4
84	MJP-3004	Spring plate	輪蓋固定彈簧片		2
85		Nut	螺母	3/16	4
86					
87	MJA-2036	Bracket	鋸弓定位塊		1
88		Nut	螺母	3/8	1
89		Snap ring	扣環	R52	2
90		Set screw	止付螺絲	3/16*3/16	2
91					
92					

2. BLADE GUIDE ARMS

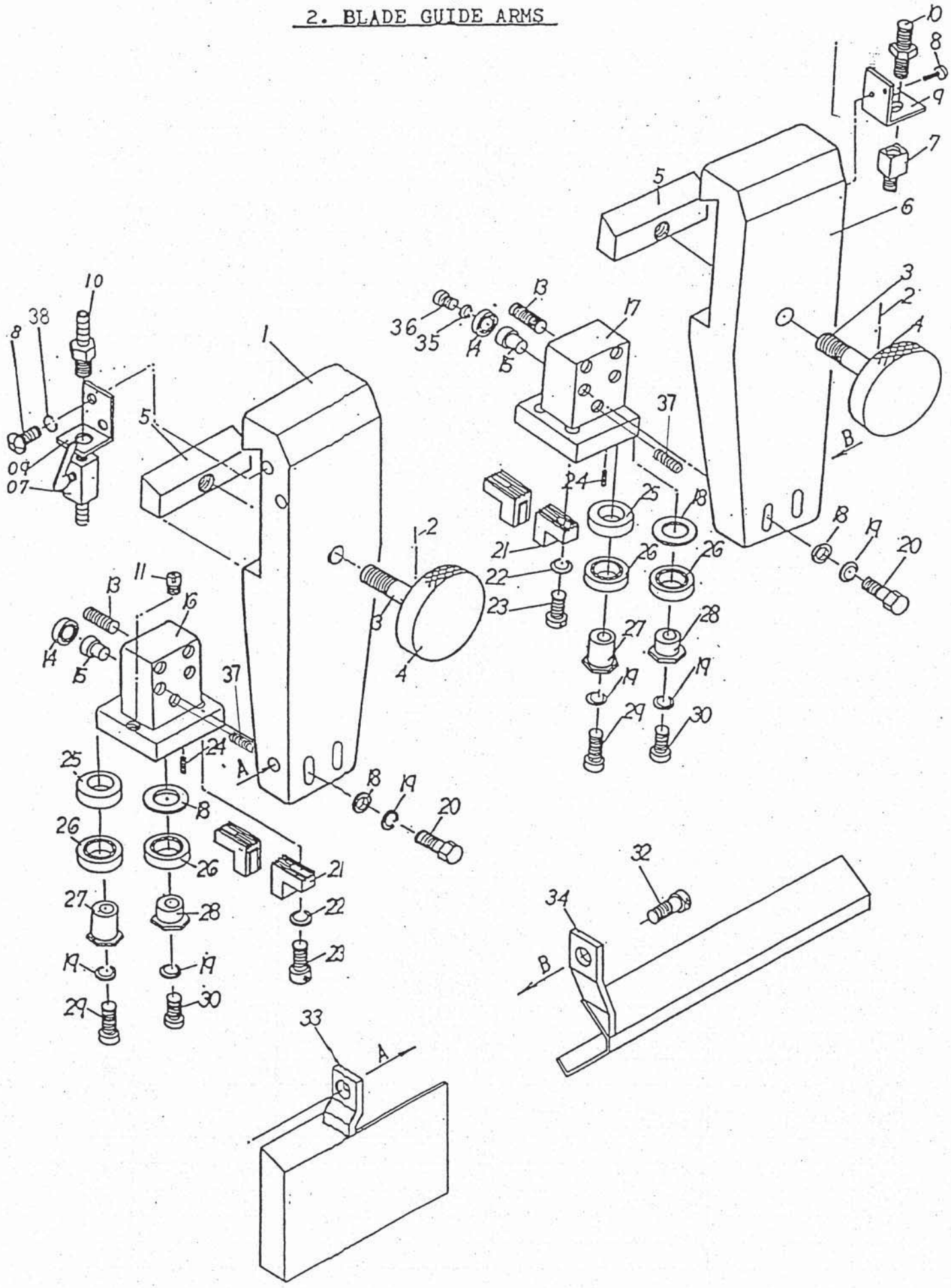

CHART 2 BLADE GUIDE ARMS

NO.	PART NO.	PART NAME	PART NAMEI N CHINESE	PART SPEC.	Q'TY
1	MJA-8005	Guide arm (left)	左鋸臂		1
2		Spring pin	彈簧梢	φ3*30L	1
3		Bolt	外六角螺絲	1/2-20UNF*2 3/8	1
4	MJA-2031	Knob	鋸臂把手		1
5	MJA-2032	Clamping block	鋸臂固定塊		2
6	MJA-8006	Guide arm (right)	右鋸臂		1
7	PP-43132	Coolant valve	開關閥	1/8	2
8		Screw	丸頭螺絲	3/16-24UNC*3/8	4
9	MJA-2041	Bracket	水龍頭座板		2
10	MJA-2043	Fitting	水管接頭	PT 1/8	2
11	MAB-6010	Coolant nozzle	水龍頭彎頭		2
12		Hose	水管	1/4*2500L	2
13		Set screw	止付螺絲	1/4-20UNC*1"	4
14	PP-14211	Guide bearing	軸承	608VV	2
15	MJA-2035	Bearing shaft	下壓滾輪軸		2
16	MJA-2033B	Guide seat (left)	左導輪座		1
17	MJA-2034B	Guide seat (right)	右導輪座		1
18		Washer	平面華司	5/16	6
19		Spring washer	彈簧華司	5/16	8
20		Screw	內六角螺絲	5/16-18UNC*1 1/4	4
21	MAB-6006	Tungsten carbide blade guide	鋸片固定塊		4
22		Spring washer	彈簧華司	1/4	4
23		Screw	內六角螺絲	1/4-20UNC*1"	4
24		Set screw	止付螺絲	1/4-20UNC*1/4	2
25	MAB-6008	Washer	偏心輪墊圈		2
26	PP-14003	Guide bearing	軸承	6202VV	4
27	MAB-6005	Eccentric bushing (long)	長偏心輪		2
28	MAE-2041	Eccentric bushing short)	短偏心輪		2
29		Screw	內六角螺絲	5/16-18UNC*1 1/2	2
30		Screw	內六角螺絲	5/16-18UNC* 1 1/4	2
31				Deleted	
32		Screw	內六角螺絲	1/4-20UNC*1/2	1
33	AJC-7005	Bushing cover	鋼刷護蓋		1
34	AJC-7009A	Blade guard (R)	右鋸片護蓋		1
35		Washer	平面華司	3/16	2
36		Screw	丸頭螺絲	3/16-24UNC*1/4	2
37		Set screw	止付螺絲	5/16*1/2	2
38		Spring washer	彈簧華司	3/16	2
39					
40					
41					
42					
43					
44					
45					
46					

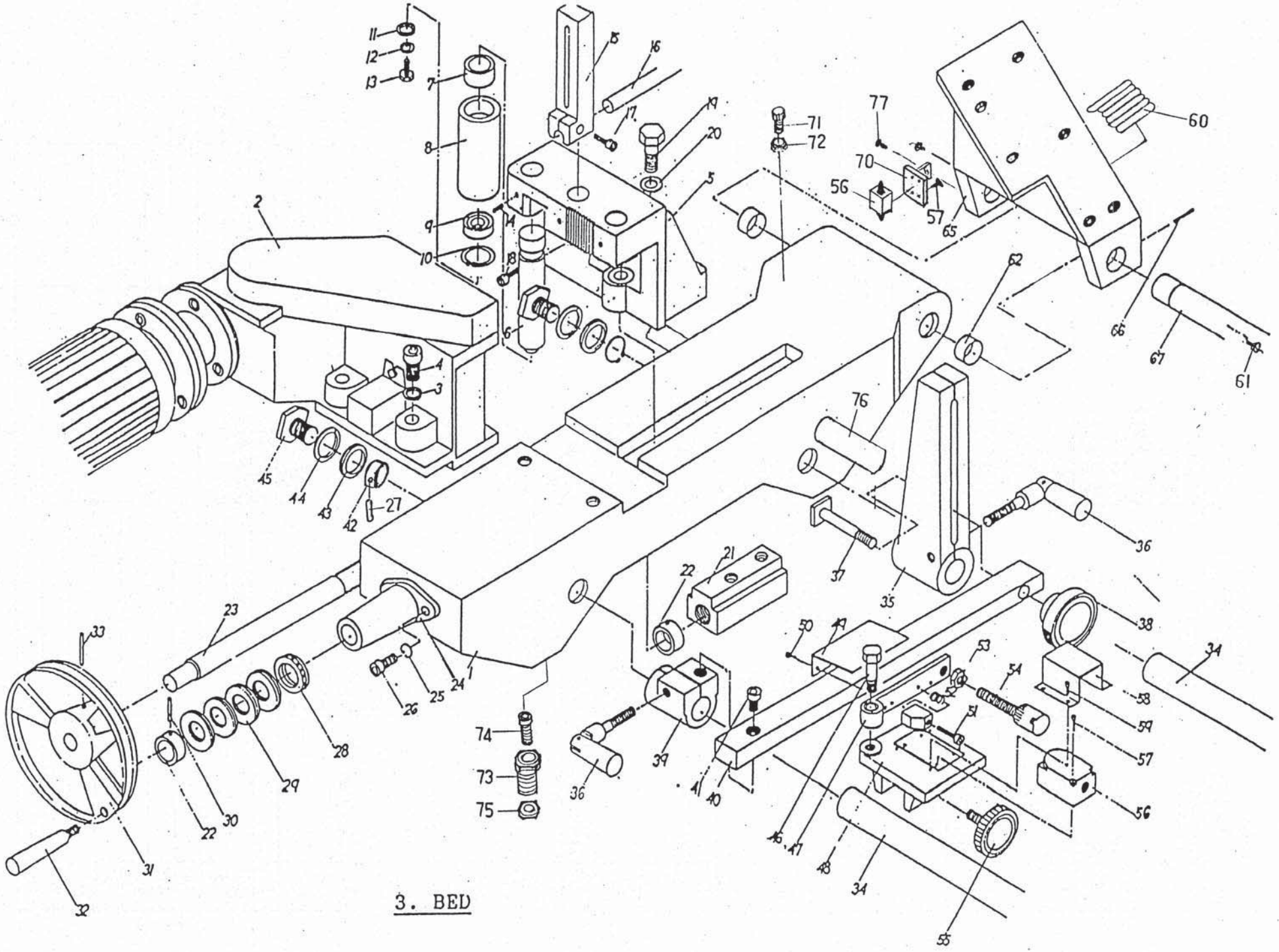
11
12
13
7
8
9
10
2
15
16
17
19
20
5
14
18
6
4
3
45
44
43
42
27
71
72
77
70
56
57
65
60
52
66
67
61
76
36
37
35
38
34
21
22
23
33
24
25
26
28
29
30
31
32
74
73
75
39
40
41
50
49
53
54
51
58
59
57
56
46
47
48
55

3. BED

CHART 3 BED

NO.	PART NO.	PART NAME	PART NAMEI N CHINESE	PART SPEC.	Q'TY
1	AJC-7001A	Bed	床面		1
2	ACA-00010	Roller feed vise	固定虎鉗組		1
3		Spring washer	彈簧華司	5/8	2
4		Bolt	內六角螺絲	5/8-11UNC*2 1/2	2
5	ACA-1042	Movable vise casting	活動虎鉗本體		1
6	ACA-1044	Shaft	活動虎鉗滾輪軸		3
7	PP-14070	Needle bearing	軸承	HK2820	3
8	ACA-1043	Roller	活動虎鉗滾輪		3
9	PP-14003	Bearing	軸承	6202ZZ	3
10		Retainer	扣環	R35	3
11		Washer	平面華司	1/4	3
12		Spring washer	彈簧華司	1/4	3
13		Screw	丸頭螺絲	1/4-20UNC*1/2	3
14		Set screw	止付螺絲	5/16-18UNC*3/8	3
15	ACA-1045	Nesting fixture	材料下壓固定塊		1
16	ACA-1046A,B	Pressuring bar	長材料下壓桿		1
17		Screw	內六角螺絲	5/16-18UNC* 1 1/4	1
18		Screw	內六角螺絲	5/16-18UNC*1 1/2	1
19		Bolt	外六角螺絲	5/8-11UNC*2 1/4	2
20		Spring washer	彈簧華司	M16	2
21	AJC-7002	Lead screw nut	導桿螺母		1
22	MJA-1013	Collar	導螺桿固定圈		2
23	AJC-7008	Vise lead screw	導螺桿		1
24	MJA-1012	Lead screw seat	導螺桿座		1
25		Spring washer	彈簧華司	3/8	2
26		Screw	外六角螺絲	3/8*1	2
27		Spring pin	彈簧梢	6*45L	2
28	PP-14410	Thrust bearing	軸承	AS/MPP-2542	1
29	ACA-1049	Disk spring	蝶形彈簧		8
30		Spring pin	彈簧梢	6*30L	2
31	PP-52020	Hand wheel	手輪	6"	1
32	PP-52030	Handle	手輪柄		1
33		Spring pin	內六角螺絲	5/16*1/2	1
34	AJC-7003	Depth bar	定寸桿		2
35	ACA-1056	Adapter,right	大調整座		1
36	ACA-1059A	Fastening bolt	調整座固定螺絲		2
37	ACA-1058	Stud	調整手輪桿		1
38	PP-52050	Knob	調整手輪		1
39	ACA-1057	Left adapter	小調整座		1
40	ACA-1055	Cross slide	定寸滑板		1
41		Screw	內六角螺絲	12W-13*1"	1
42	AJC-7004	Washer	固定圈		2
43		Washer	平面華司	5/8	2
44		Spring washer	彈簧華司	5/8	2
45		Bolt	外六角螺絲	5/8*1"	2
46	ACA-1067	Pivot bolt	開關板軸		

NO.	PART NO.	PART NAME	PART NAMEI N CHINESE	PART SPEC.	Q'TY
47	ACA-1062	Rocker	定寸開關擋板		1
48	ACA-1060	Carriage	定寸開關滑座		1
49	ACA-1066	Cover	定寸開關護蓋		1
50		Screw	丸頭螺絲	3/16-24UNC*3/8	1
51		Screw	內六角螺絲	3/8-16UNC*1 3/4	2
52	ACA-1063	Spring	定寸擋板彈簧		1
53		Nut	螺帽	7/16-20UNC	1
54	ACA-1061	Adjusting rod	定寸調整桿		1
55	PP-53040	Fastening bolt	梅花螺絲	1/2	1
56	PP-90020	Limit switch	極限開關	WLD-TZ5101	1
57		Screw	丸頭螺絲	3/16-24UNC*1/2	2
58	ACA-1065	Cover	定寸開關遮蓋		8
59		Screw	丸頭螺絲	3/16-24UNC*1/2	1
60	MJM-5006B	Spring	回程彈簧		4
61				Deleted	1
62	PP-13170	Needle bearing	乾式軸承	2820	
63				Deleted	2
64				Deleted	
65	MJA-8001	Saw bow bracket	關節座		
66		Set screw	止付螺絲	1/4-20UNC*1/2	1
67	MJA-1008B	Pivot	關節軸		2
68				Deleted	1
69				Deleted	
70	AJC-7038	L.S Bracket	限動開關座板		1
71	ACA-2074	Bolt	擋板螺絲		1
72		Nut	螺母	1/4	1
73	MJA-1003	Adjusting bolt	床面調整螺絲		2
74		Bolt	外六角螺絲	3/8*2 1/4	4
75		Spring washer	彈簧華司	3/8	4
76	SJM-4020B	Cylinder pivot	油壓缸活動軸		1
77		Bolt	外六角螺絲	M6*6L	2
78					
79					
80					
81					
82					
83					
84					
85					
86					
87					
88					
89					
90					
91					
92					

4. BASE

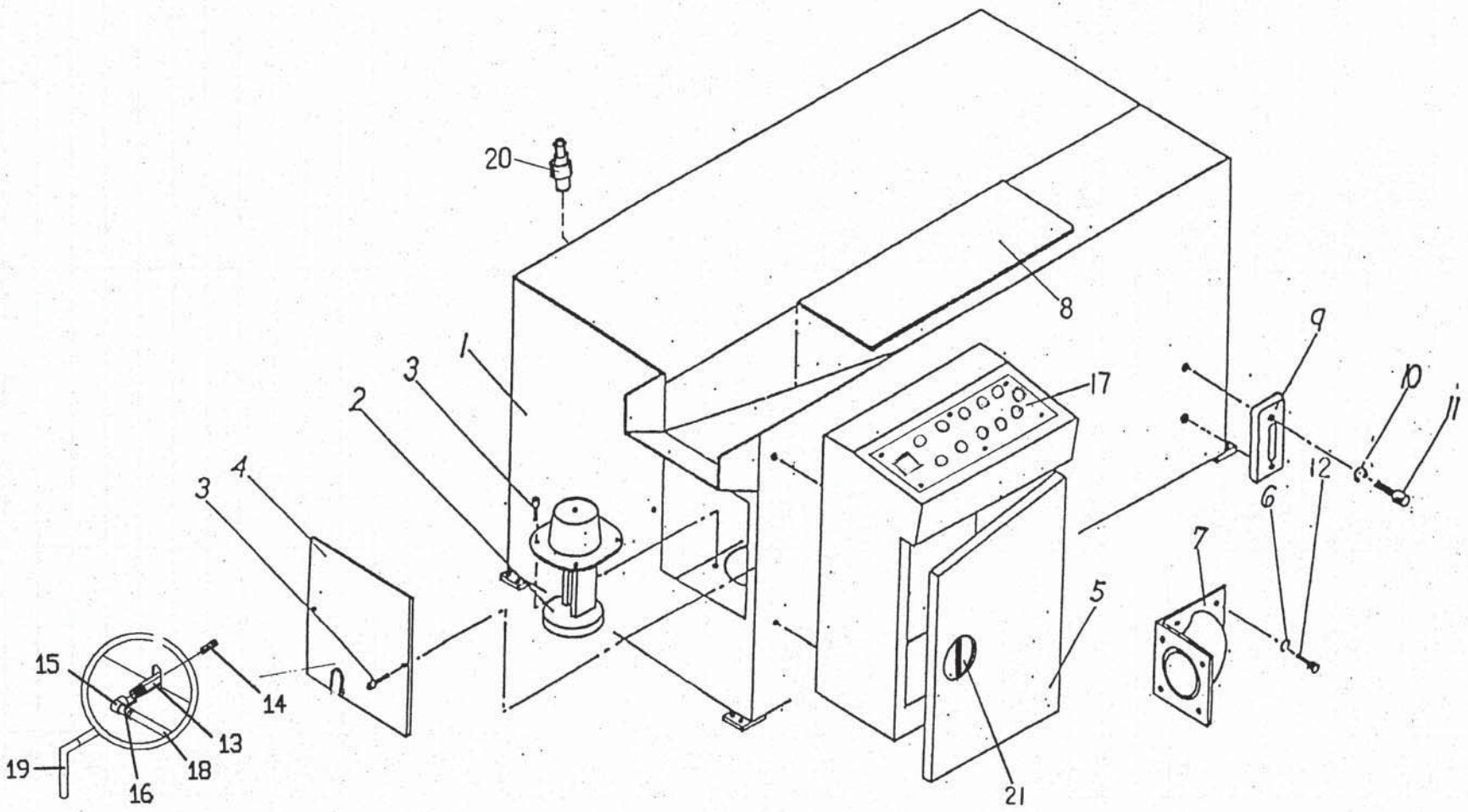

CHART 4 BASE

NO.	PART NO.	PART NAME	PART NAMEI N CHINESE	PART SPEC.	Q'TY
1	AJC-7017A	Base	底座		1
2	PP-32041	Coolant pump	浸水幫浦	1/8HP	1
3		Screw	外六角螺絲	1/4-20UNC*1/2	12
4	ACA-1003A	Pump cover	幫浦邊蓋		1
5	ACA-7007	Electric box	控制箱		1
6		Spring washer	彈簧華司	1/4	18
7	AJC-7013	Elbow	彎管		1
8		Filter plate	集水斜板		1
9	PP-21030	Oil level gauge	油面計	3"	1
10					
11					
12		Bolt	內六角螺絲	1/4*3/4	6
13	ACA-1004	Coolant nozzle	泵浦接頭		1
14	MAB-6014	Fixed coolant nozzle	固定塊水管接頭		2
15		Pipe connector	內外牙彎頭	PT3/8*3/8PT	1
16	PP-43135	Switch button valve	開關閥	A101-3/8*3/8	1
17	AJC-7007A	Control plate	控制面板		1
18		Hose	包沙管	3/8*1500L	1
19	AHA-1313	Nozzle	噴嘴		1
20	ACA-1002	Pipe connector	小線路接頭		2
21	PP-90280	Limit switch	門式開關		1
22					
23					
24					
25					
26					
27					
28					
29					
30					
31					
32					
33					
34					
35					
36					
37					
38					
39					
40					
41					
42					
43					
44					
45					
46					

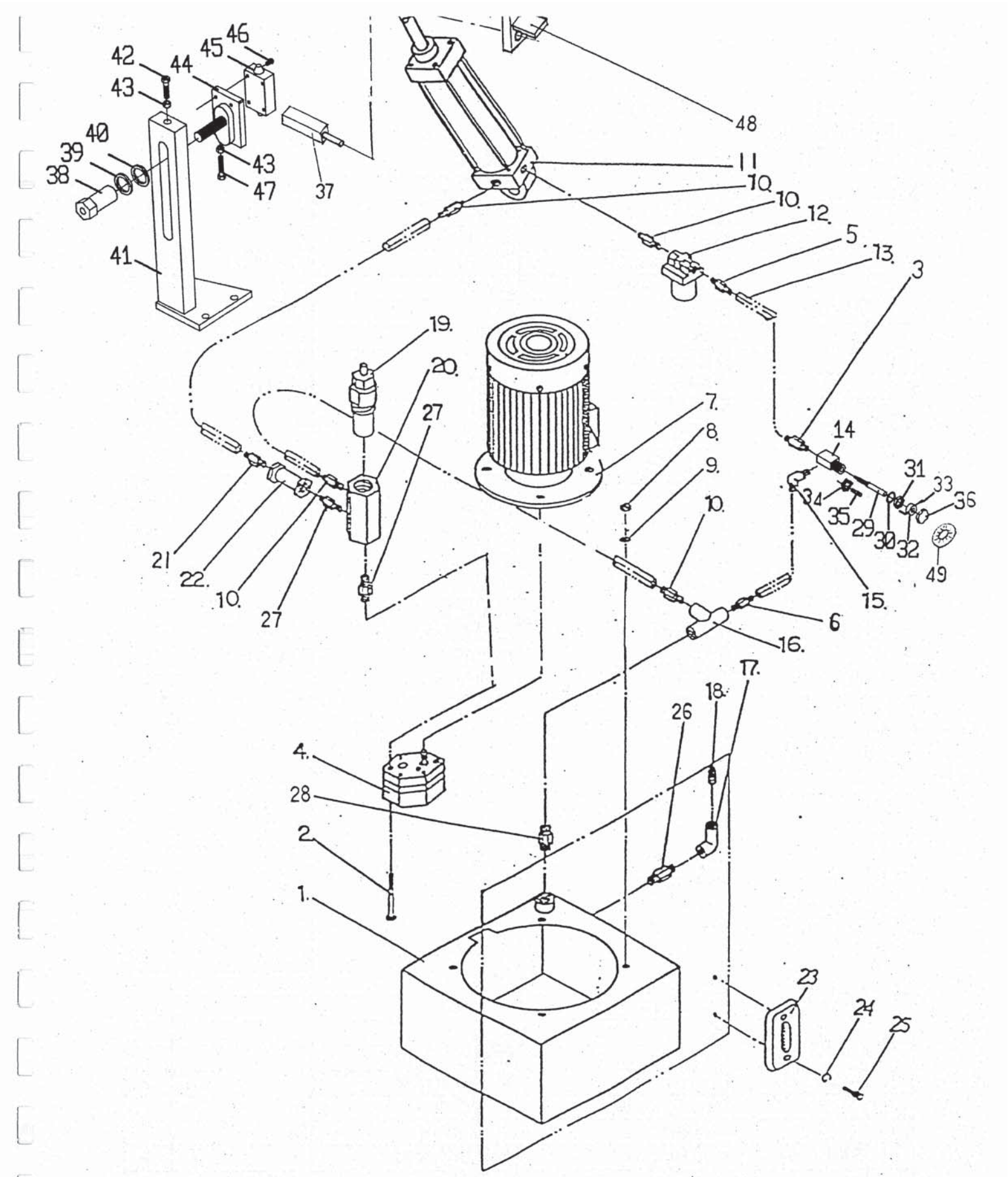
42
43
44
45
46
40
39
38
41
43
47
37
48
11
10
10
12
5
13
3
19
20
27
7
8
9
10
14
31
33
36
34
35
29
30
32
49
21
22
10
27
15
6
16
17
18
26
4
28
2
1
23
24
25

CHART 5 HYDRAULIC SYSTEM

NO.	PART NO.	PART NAME	PART NAMEI N CHINESE	PART SPEC.	Q'TY
1	SJY-2105A	Hydraulic oil tank	油壓箱		1
2		Screw	內六角螺絲	M6*25L	4
3		Pipe connector	直接頭	PT1/8*1/4H	1
4	PP-32200	Oil pump	油壓幫浦		1
5		Pipe connector	直接頭	PT1/4*1/4H	1
6		Pipe connector	直接頭	PT1/4*PT1/4	1
7	PP-31311	Motor	馬達	1/4HP	1
8		Nut	螺帽	M10	4
9		Spring washer	彈簧華司	M10	4
10		Pipe connector	彎接頭	1/4T*1/4H	4
11	SJM-4026	Cylinder	油壓缸		1
12	PP-43601	Solenoid	電磁閥	MAIB-D1353-00-110	1
13		Hydraulic hose	油管	1/4	1
14	ACA-2063-2	Feed rate valve	流量閥本體		1
15		Elbow	彎接頭	PT1/8*1/4H	1
16		TEE	三通接頭	PT1/4	1
17		Elbow	彎頭	PT1/2	1
18		Socket hd.plug	塞頭	1/2	1
19	ACA-10100	Relief valve	洩壓閥整組		1
20	KM-1040	Oil distributing block	減壓閥固定座		1
21		Pipe connector	彎接頭	PT3/8*1/4H	1
22	PP-43110	Check valve	止回閥		1
23	PP-21030	Oil level gauge	油面計		1
24					
25					
26		Pipe connector	直接頭	PT1/2*PT1/2	1
27		Pipe connector	直接頭	PT1/4*PT3/8	1
28		Pipe connector	直接頭	PT1/2*PT1/4	1
29	ACA-2063-1	Adjusting rod	流量閥調整桿		1
30		Washer	平面華司	φ 16	1
31	MAJ-4010	Nut	六角螺帽		1
32	MAJ-4007	Pointer & Bracket	指針及座		1
33		Screw	丸頭螺絲	3/16*3/8	1
34		Nut	螺母	3/16	1
35	MAJ-4008	Pointer rod	指針擋桿		1
36		Knob	旋鈕		1
37	SJM-4028	Fixed pin	油壓缸固定梢		1
38	ACA-2053	Fixed nut	滑座固定螺帽		1
39		Spring washer	彈簧華司	5/8	1
40		Washer	平面華司	5/8	
41	SJM-4044	L.S Bracket	限動開關滑板		1
42		Screw	丸頭螺絲	5/16*3"	1
43		Nut	螺母	5/16	2
44	ACA-2052	L.S Bracket	限動開關滑座		1
45	PP-90020	Limit switch	限動開關	WLD-TZ5101	1
46		Screw	丸頭螺絲	3/16*1 1/2	4

NO.	PART NO.	PART NAME	PART NAMEI N CHINESE	PART SPEC.	Q'TY
47		Screw	外六角螺絲	5/16*1"	1
48	AJC-7102	Bracket	油壓缸固定耳		1
49	PP-61006	Plate	流量刻度板		1
50					
51					
52					
53					
54					
55					
56					
57					
58					
59					
60					
61					
62					
63					
64					
65					
66					
67					
68					
69					
70					
71					
72					
73					
74					
75					
76					
77					
78					
79					
80					
81					
82					
83					
84					
85					
86					
87					
88					
89					
90					
91					
92					

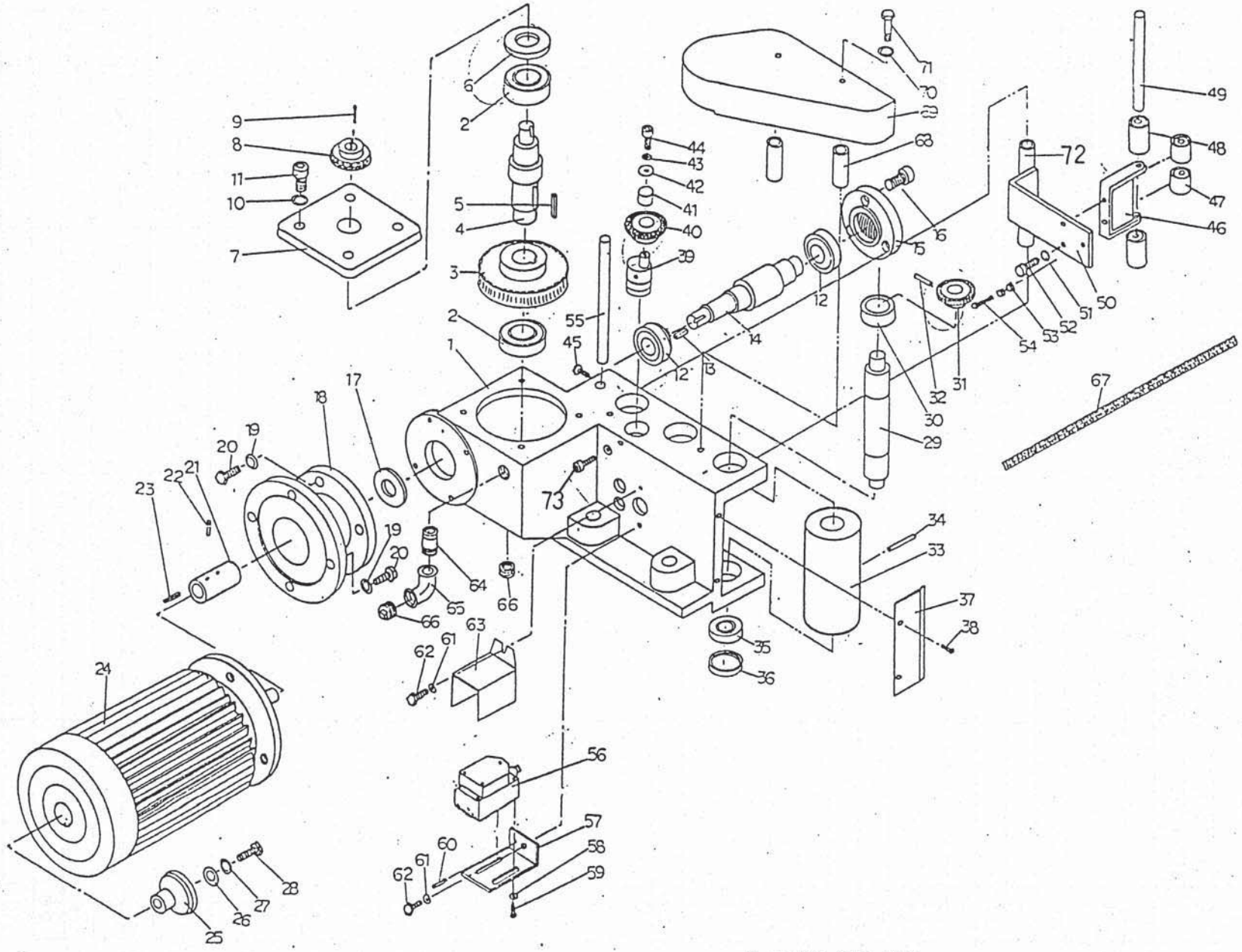

6. ROLLER FEED VICE

CHART 6 ROLLER FEED VISE

NO.	PART NO.	PART NAME	PART NAMEI N CHINESE	PART SPEC.	Q'TY
1	ACA-1014	Feed roller housing	固定虎鉗		1
2	PP-14570	Bearing	軸承	6205CM	2
3	ACA-1037	Worm gear	蝸輪		1
4	ACA-1041	Worm gear shaft	蝸輪軸		1
5		Key	方鍵	7*7*15L	1
6	PP-51030	Oil seal	油封	25*40*8	1
7	ACA-1038	Gear box cover	蝸輪蓋		1
8	ACA-1030	Sprocket	主動鏈輪		1
9		Key	方鍵	6*6*15L	1
10		Lock washer	彈簧華司	M8	4
11		Screw	外六角螺絲	5/16-18UNC*20L	4
12	PP-14610	Bearing	軸承	4T-30204	2
13		Key	方鍵	5*5*15L	1
14	ACA-1039	Worm	蝸桿		1
15	ACA-1040	End cover	蝸桿蓋		1
16		Screw	內六角螺絲	3/8-16UNC*15L	3
17	PP-51040	Oil seal	油封	20*47*8	1
18	ACA-1033A	Adapter	連接凸緣		1
19		Lock washer	彈簧華司	3/8	8
20		Screw	外六角螺絲	3/8-16UNC*20L	8
21	ACA-1034	Coupling	接軸套		1
22		Set screw	止付螺絲	M5*5L	1
23		Key	方鍵	5*5*15L	1
24	PP-31323	Motor	馬達	1/4HP	1
25	ACA-1035	Handwheel	微動手輪		1
26	ACA-1036	Washer	微動手輪軸套		1
27		Lock washer	彈簧華司	M8	1
28		Screw	內六角螺絲	5/16-18UNC*1 1/4	1
29	ACA-1016	Roller shaft	固定虎鉗滾輪軸		1
30	PP-14070	Bearing	軸承	HK-2820	3
31	ACA-1031	Sprocket	從動鏈輪	RS40 X PTB	3
32		Pin	斜度梢	2*25L	3
33	ACA-1015	Drive roller	固定虎鉗滾輪		3
34		Spring pin	彈簧梢	6*60L	3
35	PP-14251	Bearing	軸承	6003ZZ	3
36	ACA-1027	Washer	固定滾輪墊圈		3
37	ACA-1017	Chip wiper	滾輪側蓋		1
38		Screw	平頭十字螺絲	3/16-24UNC*10L	2
39	ACA-1026	Adjusting cam shaft	鏈輪調整桿		1
40	ACA-1032	Sprocket	調整鏈輪	RS40 X PTB	1
41	PP-14020	Bearing	軸承	HK-1210	1
42	PPA-6	Washer	平面華司	M6	1
43	PQA-6	Lock washer	彈簧華司	M6	1
44	PBA-6-20	Screw	外六角螺絲	1/4-20UNC-20L	1
45	PLA-8-15	Screw	外六角螺絲	5/16-18UNC-15L	2
46	ACA-1020	Bracket	送料開關 U 型架		1

AH-1010JAY

CHART 6 ROLLER FEED VISE

NO.	PART NO.	PART NAME	PART NAMEI N CHINESE	PART SPEC.	Q'TY
47	ACA-1021	Roller (A)	送料開關短滾輪		2
48	ACA-1022	Roller (B)	送料開關長滾輪		2
49	ACA-1023	Shaft	U型架活動軸		1
50	ACA-1019	Rock arm	送料開關固定板		1
51		Lock washer	彈簧華司	1/4	2
52		Screw	內六角螺絲	1/4-20UNC*15L	2
53		Nut	螺帽	1/4-20UNC	2
54		Screw	內六角螺絲	1/4-20UNC*40L	1
55	ACA-1018	Pivot	送料開關軸		1
56	PP-90020	Limit switch	微動開關	WLD-TZ5101	1
57	ACA-1024	Bracket	送料電器座板		1
58		Lock washer	平面華司	M6	2
59		Screw	內六角螺絲	M6*10L	2
60				Deleted	1
61		Lock washer	彈簧華司	1/4	2
62		Screw	內六角螺絲	1/4-20UNC*10L	2
63	ACA-1025	Limit switch guard	送料電器座蓋		1
64				Deleted	1
65		Flbow joint	內外牙彎頭	PT1/2*PT1/2	1
66			塞頭	PT1/2	2
67	PP-19010	CHAIN	鏈條		1
68	ACA-1029	Spacer	護蓋墊圈	1/4	2
69	ACA-1028	Chain guard	鏈輪護蓋		1
70		Lock washer	平面華司	5/16	2
71		Screw	外六角螺絲	5/16-18UNC*55L	2
72	ACA-1019A	Shaft sleeve	送料開關軸套		1
73		Screw	內六角螺絲	5/16*3/4	1
74					
75					
76					
77					
78					
79					
80					
81					
82					
83					
84					
85					
86					
87					
88					
89					
90					
91					
92					

Reference

APPENDIX

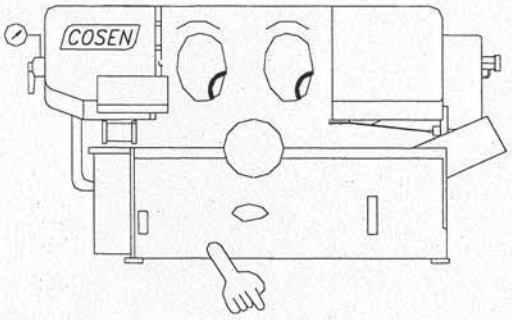

APPENDIX A

SPECIFICATIONS OF THE MACHINE

MODEL		AH-1010JAY
MAX. CAPACITY	●	250 mm (10")
	■	250 H × 250 W (10" × 10")
CUTTING SPEED RANGE	60 Hz	29,46,65,98 (m/min.) 95,151,213,321 (ft/min.)
	50 Hz	24,38,53,81 (m/min.) 79,125,174,266 (ft/min.)
MOTOR OUTPUT	SAW BLADE	1.125 kw
	HYDRAULIC	0.18 kw
	COOLANT	0.1 kw
BLADE SIZE		3353 mm × 25 mm × 0.9 mm (11'× 1"× 0.035")
HEIGHT OF WORK BED		650 mm (25.5")
FLOOR SPACE	LENGTH	1600 mm (63")
	WIDTH	710 mm (28")
	HEIGHT	1080 mm (42.5")
MACHINE WEIGHT		450 Kg (995 LBS)
STANDARD ACCESSORIES	HEXAGON WRENCH	ONE SET (1.5 mm - 10 mm)
	BLADE	ONE PIECE
	BRUSH	ONE PIECES
	MATERIAL STOP	ONCE PIECE
	ELECTRIC SYSTEM	ONE UNIT
	COMPLETE COOLANT SYSTEM	ONE UNIT

* Design and specifications are subjected to change without notice.

APPENDIX B

FOUNDATION DIAGRAM

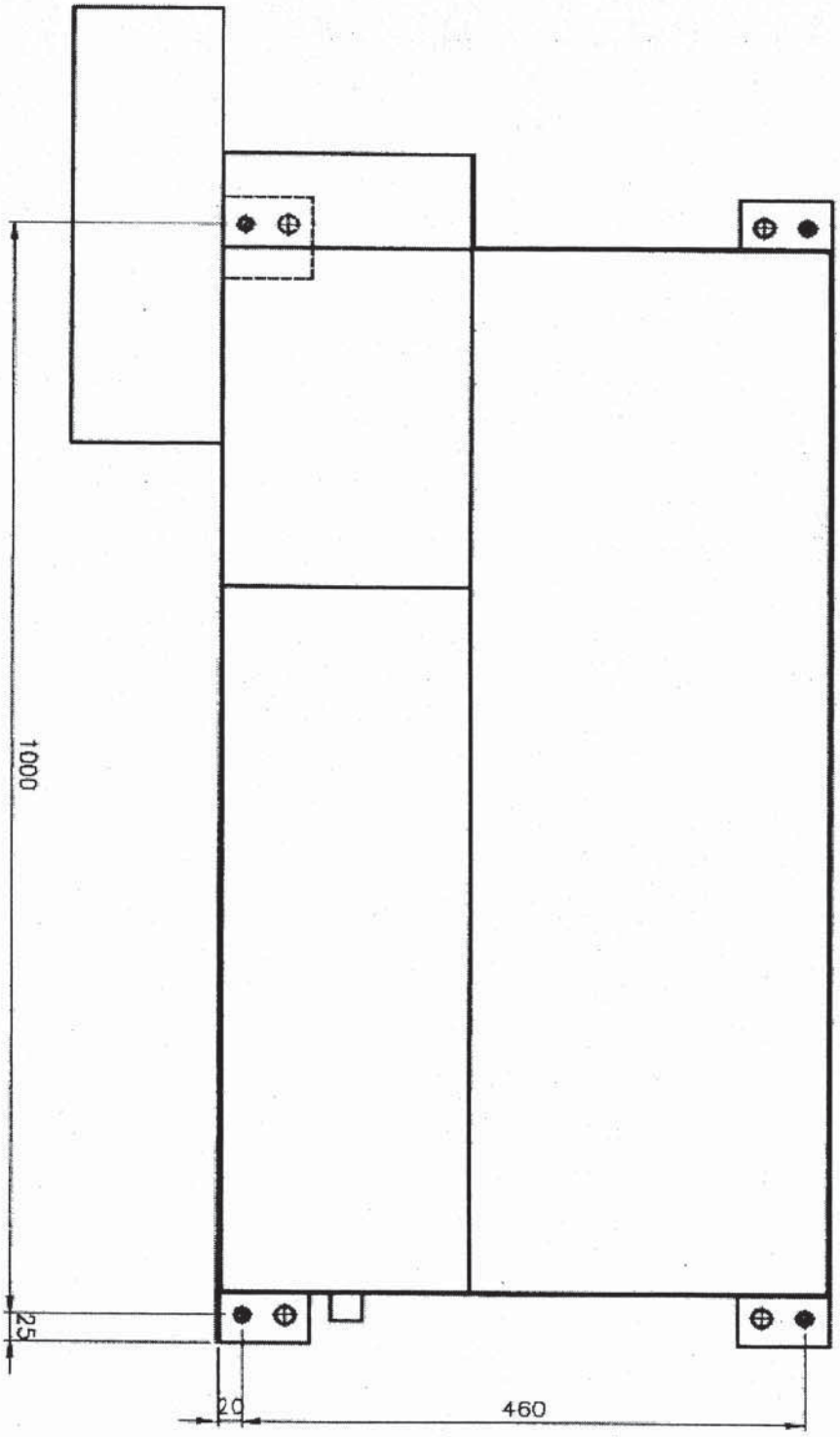

OVER DIMENSIONS OF THE MACHINE

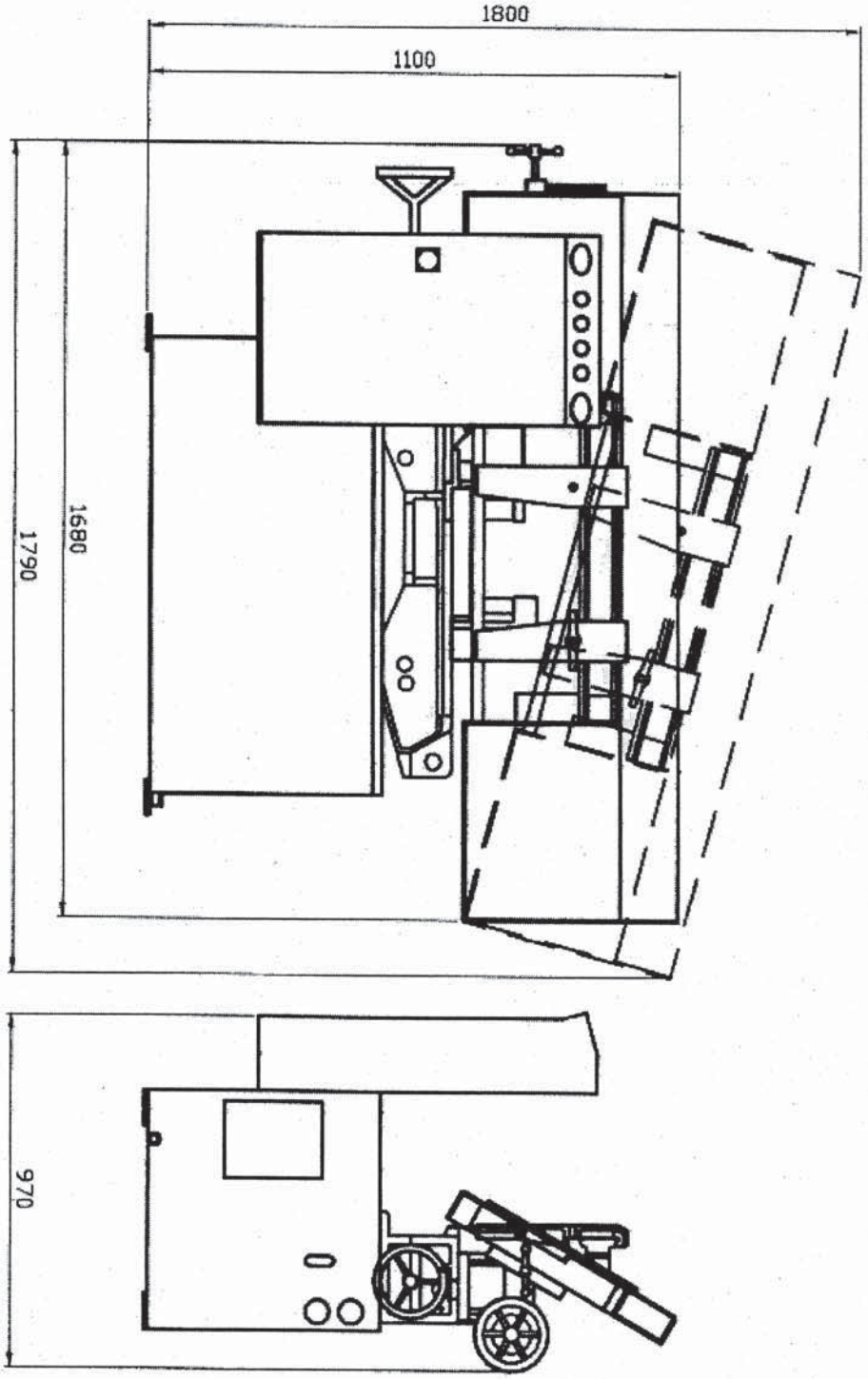

APPENDIX C

ACCESSORIES OF THE MACHINE

I. STANDARD ACCESSORIES:

NAME	QUANTITY	UNIT	SPECIFICATION
Adjustable material stop	1	set	
Chip brush	1	pc.	
Cleaning Gun	1	pc.	
Complete coolant system	1	pc.	
Nesting fixture (vertical clamping)	1	set	
Operation manual & parts list	1	pc.	
Saw blade	1	pc.	
Tool box with tools	1	pc.	

Please call dealer for ordering the following items:

II. OPTIONAL ACCESSORIES

NAME	QUANTITY	UNIT	SPECIFICATION
Additional saw blade		pc	3353L×25W×0.9T
Additional chip brushes		pc	
Clamping device for short piece		set	
Non step variable speed device		set	
Roller table		set	1 M or 2 M
Vertical clamping roller		set	

APPENDIX D

MAINTENANCE SCHEDULE

Before beginning work each day

- ★ Please check the hydraulic oil level, add oil as necessary.(middle level is better)
- ★ Please check the cutting fluid level, add fluid as necessary. If the fluid appears contaminated or deteriorated, drain and replace it.
- ★ Please check the saw blade to ensure that it is properly positioned on both the drive and driven wheels.
- ★ Please make sure that the saw blade is properly clamped by the left and right inserts (blade guides).
- ★ Please check the wire brush for proper contact with the saw blade. Replace the wire brush if it is worn.

Before ending day's work

- ✧ Please remove saw chips and clean the machine when discharging the cutting fluid and when work has been completed.

  ☛ When cutting fluid is being discharged during saw blade operation, please follow the safety method carefully. Otherwise, it will greatly increase your chance of hand injury.
- ✧ Lubricate the following items:
  - Front vise slide plates
  - Rear vise slide plates
  - Feed cylinder guide shafts
  - Rigid column
  - Quick approach device
  - Rear vise guide bars

Once every month

Please apply grease to the following items:

- ◆ Drive wheel
- ◆ Driven wheel
- ◆ Blade tension device
- ◆ Worm shaft

Recommended Grease:

Shell Alvania EP Grease 2
Mobil Mobilplex 48

Once every six months

- ♦ Please clean the filters in the cutting fluid tank.
- ♦ Please replace the transmission oil after the first three months (or 600 hours of operation) Thereafter, every six months (or every 1200 hours of operation), whichever occurs first. Check the sight gauge to ascertain the transmission oil level.

  Recommended Oil:

  Shell Tellus 75
  Mobil Mobilplex 48
- ♦ Replace the hydraulic oil.

  Recommended Oil:

  Shell Tellus 27, Mobil DTE Oil Light Hydraulic 28.

SUGGESTION SHEET

DATE / /

GET A FREE CATALOG JUST FOR EXPRESSING YOUR OPINION !

Help us improve our manual and machine. Please complete this form, pull out this page and send it in today. The address is on the reverse side.

Machine Type of Instruction Manual	
Print Number	

Name		**Company**		**Title**	
Department		**Telephone**			
Address		**City**		**State**	
Zip		**Country**			

1. How would you rate the overall quality of this machine?
- ❑ Excellent
- ❑ Very Good
- ❑ Good
- ❑ Fair
- ❑ Below Average
- ❑ Poor

2. What were the things you liked most about the instruction manual?(Check all that apply)
- ❑ Pace
- ❑ Format
- ❑ Writing Style
- ❑ Table of Contents
- ❑ Illustrations
- ❑ Type Style
- ❑ Cover
- ❑ Depth of Coverage
- ❑ Fast Track Notes

3. How did you decide to buy this machine?
- ❑ Recommended by friend
- ❑ Recommended by store personnel
- ❑ Manufacturer reputation
- ❑ Read advertisement in _____
- ❑ Other _____

4. What is your level of experience with the subject covered for machine?
- ❑ Beginner
- ❑ Intermediate
- ❑ Advanced

5. How long have you been using a machine?
years _____
months _____

6. What kind of optional accessories do you plan to buy? (Check all that apply)
- ❑ Additional saw blade
- ❑ Roller table
- ❑ Multi-vises clamping
- ❑ Vise pressure regulator
- ❑ Infinitely variable blade speed device
- ❑ Additional wire brushes
- ❑ Chip conveyor
- ❑ Hydraulic clamping device(double side type)

7. On what machine-related subject(s) would you like to see more instruction?

Section	Improve

8. Do you have any other comments about this machine?

Machine Parts	Improve

✂ Please cut the line here.

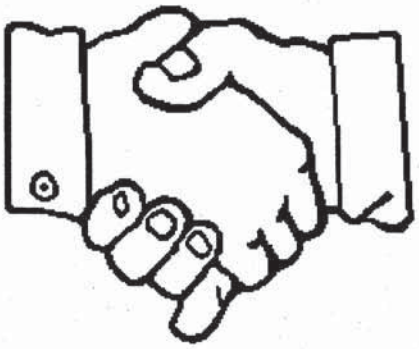

PLEASE FOLD, SEAL, AND MAIL TO COSEN

Stamp

To:

COSEN CO., LTD.

Customer Service Department
110 Ching-Fu Street
Hsin-Chu 300
Taiwan, R.O.C.

COSEN MACHINERY INDUSTRIAL CO., LTD.

110, CHING-FU STREET, HSIN-CHU, TAIWAN, R. O. C.

TEL 886-3-5332143-5

FAX 886-3-5348324

e-mail cosen@ms9.hinet.net

9MAH-1001